HILUX

Electrical Wiring Diagram

cardiagn.com

Pub. No. DR114W

FOREWORD

This wiring diagram manual has been prepared to provide information on the electrical system of the HILUX.

Applicable models: KUN15, 16, 25, 26 Series

For service specifications and repair procedures of the above models other than those listed in this manual, refer to the following manuals;

Manual Name	Pub. No.
● HILUX Repair Manual	DR172E
● HILUX New Car Features	NCF271E

All information in this manual is based on the latest product information at the time of publication. However, specifications and procedures are subject to change without notice.

TOYOTA MOTOR CORPORATION

cardiagn.com

NOTICE

When handling supplemental restraint system components (removal, installation or inspection, etc.), always follow the direction given in the repair manuals listed above to prevent accidents and supplemental restraint system malfunction.

cardiagn.com

HILUX
ELECTRICAL WIRING DIAGRAM

	Section Code	Page
INTRODUCTION	A	2
HOW TO USE THIS MANUAL	B	3
TROUBLESHOOTING	C	12
ABBREVIATIONS	D	17
GLOSSARY OF TERMS AND SYMBOLS	E	18
RELAY LOCATIONS	F	20
ELECTRICAL WIRING ROUTING	G	36
SYSTEM CIRCUITS	H	59
GROUND POINT	I	182
POWER SOURCE (Current Flow Chart)	J	188
CONNECTOR LIST	K	194
PART NUMBER OF CONNECTORS	L	202
OVERALL ELECTRICAL WIRING DIAGRAM	M	206

©2004 TOYOTA MOTOR CORPORATION
All rights reserved. This book may not be reproduced or copied, in whole or in part, without the written permission of Toyota Motor Corporation.

cardiagn.com

A INTRODUCTION

This manual consists of the following 13 sections:

No.	Section	Description
A	INDEX	Index of the contents of this manual.
	INTRODUCTION	Brief explanation of each section.
B	HOW TO USE THIS MANUAL	Instructions on how to use this manual.
C	TROUBLE–SHOOTING	Describes the basic inspection procedures for electrical circuits.
D	ABBREVIATIONS	Defines the abbreviations used in this manual.
E	GLOSSARY OF TERMS AND SYMBOLS	Defines the symbols and functions of major parts.
F	RELAY LOCATIONS	Shows position of the Electronic Control Unit, Relays, Relay Block, etc. This section is closely related to the system circuit.
G	ELECTRICAL WIRING ROUTING	Describes position of Parts Connectors, Splice points, Ground points, etc. This section is closely related to the system circuit.
H	INDEX	Index of the system circuits.
	SYSTEM CIRCUITS	Electrical circuits of each system are shown from the power supply through ground points. Wiring connections and their positions are shown and classified by code according to the connection method. (Refer to the section, ”How to use this manual”). The ”System Outline” and ”Service Hints” useful for troubleshooting are also contained in this section.
I	GROUND POINT	Shows ground positions of all parts described in this manual.
J	POWER SOURCE (Current Flow Chart)	Describes power distribution from the power supply to various electrical loads.
K	CONNECTOR LIST	Describes the form of the connectors for the parts appeared in this book. This section is closely related to the system circuit.
L	PART NUMBER OF CONNECTORS	Indicates the part number of the connectors used in this manual.
M	OVERALL ELECTRICAL WIRING DIAGRAM	Provides circuit diagrams showing the circuit connections.

cardiagn.com

This manual provides information on the electrical circuits installed on vehicles by dividing them into a circuit for each system.

The actual wiring of each system circuit is shown from the point where the power source is received from the battery as far as each ground point. (All circuit diagrams are shown with the switches in the OFF position.)

When troubleshooting any problem, first understand the operation of the circuit where the problem was detected (see System Circuit section), the power source supplying power to that circuit (see Power Source section), and the ground points (see Ground Point section). See the System Outline to understand the circuit operation.

When the circuit operation is understood, begin troubleshooting of the problem circuit to isolate the cause. Use Relay Location and Electrical Wiring Routing sections to find each part, junction block and wiring harness connectors, wiring harness and wiring harness connectors, splice points, and ground points of each system circuit. Internal wiring for each junction block is also provided for better understanding of connection within a junction block.
Wiring related to each system is indicated in each system circuit by arrows (from__, to__). When overall connections are required, see the Overall Electrical Wiring Diagram at the end of this manual.

cardiagn.com

[A]

Stop Light

∗ The system shown here is an EXAMPLE ONLY. It is different to the actual circuit shown in the SYSTEM CIRCUITS SECTION.

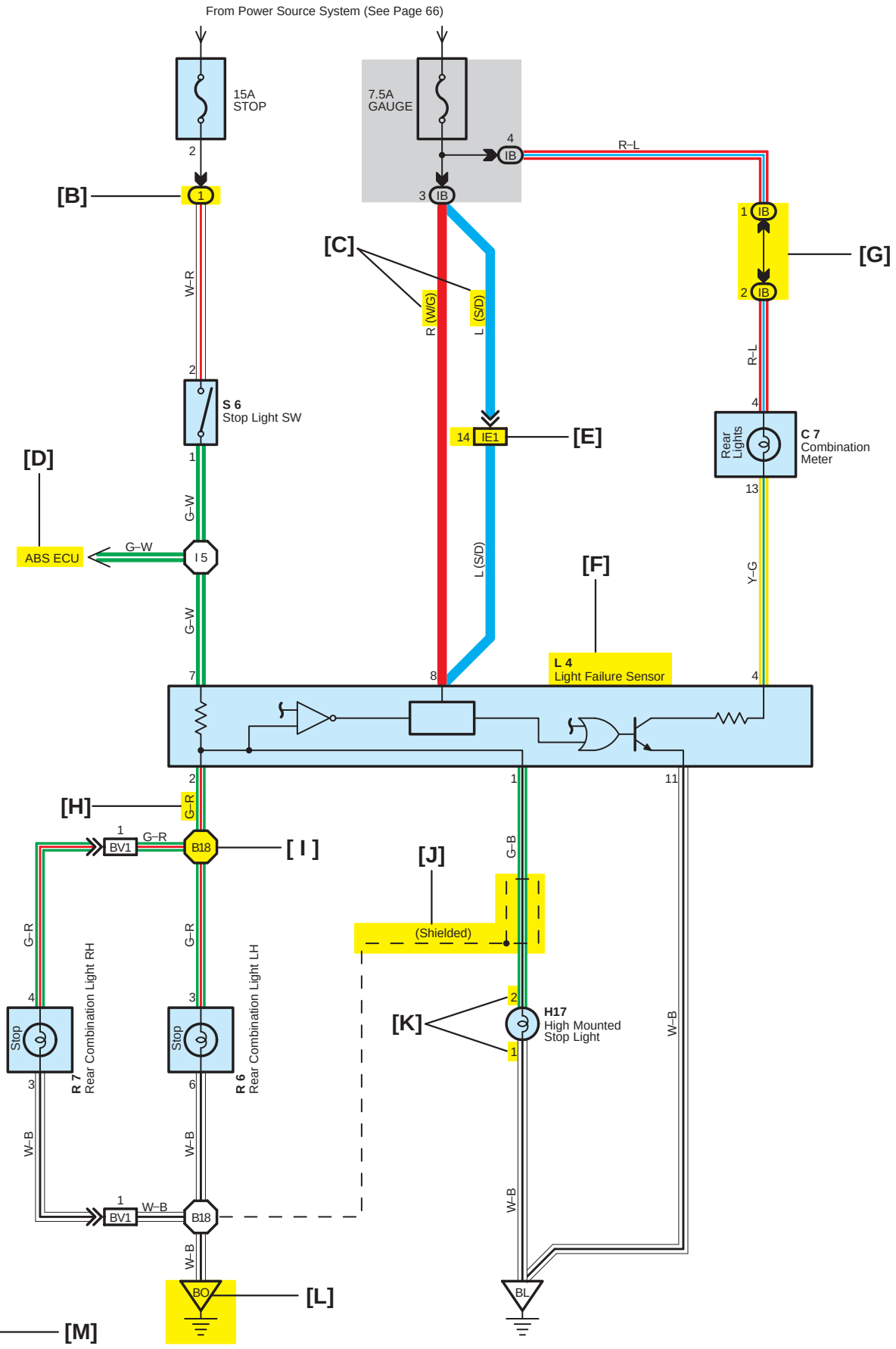

cardiagn.com

[A] : System Title

[B] : Indicates a Relay Block. No shading is used and only the Relay Block No. is shown to distinguish it from the J/B

Example: (1) Indicates Relay Block No.1

[C] : ( ) is used to indicate different wiring and connector, etc. when the vehicle model, engine type, or specification is different.

[D] : Indicates related system.

[E] : Indicates the wiring harness and wiring harness connector. The wiring harness with male terminal is shown with arrows (⩔).
Outside numerals are pin numbers.

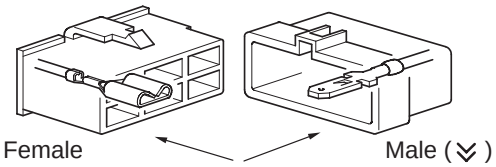

The first letter of the code for each wiring harness and wiring harness connector(s) indicates the component's location, e.g, "E" for the Engine Compartment, "I" for the Instrument Panel and Surrounding area, and "B" for the Body and Surrounding area.

When more than one code has the first and second letters in common, followed by numbers (e.g, IH1, IH2), this indicates the same type of wiring harness and wiring harness connector.

[F] : Represents a part (all parts are shown in sky blue). The code is the same as the code used in parts position.

[G] : Junction Block (The number in the circle is the J/B No. and the connector code is shown beside it). Junction Blocks are shaded to clearly separate them from other parts.

Example:

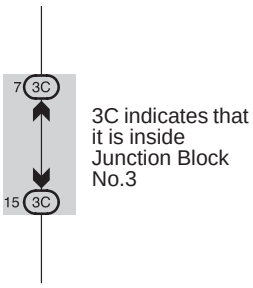

[H] : Indicates the wiring color.

Wire colors are indicated by an alphabetical code.

B = Black	W = White	BR = Brown
L = Blue	V = Violet	SB = Sky Blue
R = Red	G = Green	LG = Light Green
P = Pink	Y = Yellow	GR = Gray
O = Orange		

The first letter indicates the basic wire color and the second letter indicates the color of the stripe.

Example: L – Y

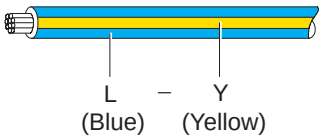

[I] : Indicates a wiring Splice Point (Codes are "E" for the Engine Room, "I" for the Instrument Panel, and "B" for the Body).

Example:

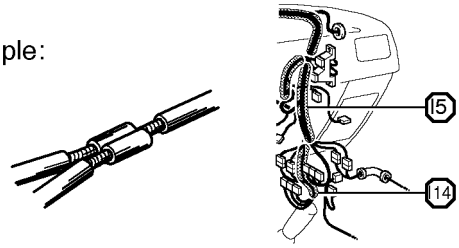

The Location of splice Point I 5 is indicated by the shaded section.

[J] : Indicates a shielded cable.

[K] : Indicates the pin number of the connector.
The numbering system is different for female and male connectors.

Example: Numbered in order from upper left to lower right / Numbered in order from upper right to lower left

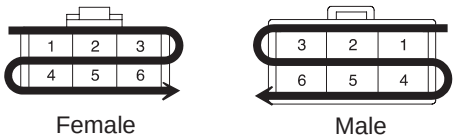

[L] : Indicates a ground point.

The first letter of the code for each ground point(s) indicates the component's location, e.g, "E" for the Engine Compartment, "I" for the Instrument Panel and Surrounding area, and "B" for the Body and Surrounding area.

[M] : Page No.

cardiagn.com

[N] **System Outline**

Current is applied at all times through the STOP fuse to TERMINAL 2 of the stop light SW.
When the ignition SW is turned on, current flows from the GAUGE fuse to TERMINAL 8 of the light failure sensor, and also flows through the rear lights warning light to TERMINAL 4 of the light failure sensor.

Stop Light Disconnection Warning

When the ignition SW is turned on and the brake pedal is pressed (Stop light SW on), if the stop light circuit is open, the current flowing from TERMINAL 7 of the light failure sensor to TERMINALS 1, 2 changes, so the light failure sensor detects the disconnection and the warning circuit of the light failure sensor is activated.
As a result, the current flows from TERMINAL 4 of the light failure sensor to TERMINAL 11 to GROUND and turns the rear lights warning light on. By pressing the brake pedal, the current flowing to TERMINAL 8 of the light failure sensor keeps the warning circuit on and holds the warning light on until the ignition SW is turned off.

[O] **Service Hints**

S6 Stop Light SW

2–1 : Closed with the brake pedal depressed

L4 Light Failure Sensor

1, 2, 7–Ground : Approx. 12 volts with the stop light SW on
4, 8–Ground : Approx. 12 volts with the ignition SW at ON position
11–Ground : Always continuity

[P] **: Parts Location**

Code	See Page	Code	See Page	Code	See Page
C7	34	L4	36	R7	37
H17	36	R6	37	S6	35

[Q] **: Relay Blocks**

Code	See Page	Relay Blocks (Relay Block Location)
1	18	R/B No.1 (Instrument Panel Brace LH)

[R] **: Junction Block and Wire Harness Connector**

Code	See Page	Junction Block and Wire Harness (Connector Location)
IB	20	Instrument Panel Wire and Instrument Panel J/B (Lower Finish Panel)
3C	22	Instrument Panel Wire and J/B No.3 (Instrument Panel Brace LH)

[S] **: Connector Joining Wire Harness and Wire Harness**

Code	See Page	Joining Wire Harness and Wire Harness (Connector Location)
IE1	42	Floor Wire and Instrument Panel Wire (Left Kick Panel)
BV1	50	Luggage Room Wire and Floor Wire (Luggage Room Left)

[T] **: Ground Points**

Code	See Page	Ground Points Location
BL	50	Under the Left Center Pillar
BO	50	Back Panel Center

[U] **: Splice Points**

Code	See Page	Wire Harness with Splice Points	Code	See Page	Wire Harness with Splice Points
I5	44	Cowl Wire	B18	50	Luggage Room Wire

cardiagn.com

[N] : Explains the system outline.

[O] : Indicates values or explains the function for reference during troubleshooting.

[P] : Indicates the reference page showing the position on the vehicle of the parts in the system circuit.

Example : Part ”L4” (Light Failure Sensor) is on page 36 of the manual.
∗ The letter in the code is from the first letter of the part, and the number indicates its order in parts starting with that letter.

Example : L 4
- 4 — Parts is 4th in order
- L — Light Failure Sensor

[Q] : Indicates the reference page showing the position on the vehicle of Relay Block Connectors in the system circuit.

Example : Connector ”1” is described on page 18 of this manual and is installed on the left side of the instrument panel.

[R] : Indicates the reference page showing the position on the vehicle of J/B and Wire Harness in the system circuit.

Example : Connector ”3C” connects the Instrument Panel Wire and J/B No.3. It is described on page 22 of this manual, and is installed on the instrument panel left side.

[S] : Indicates the reference page describing the wiring harness and wiring harness connector (the female wiring harness is shown first, followed by the male wiring harness).

Example : Connector ”IE1” connects the floor wire (female) and Instrument panel wire (male). It is described on page 42 of this manual, and is installed on the left side kick panel.

[T] : Indicates the reference page showing the position of the ground points on the vehicle.

Example : Ground point ”BO” is described on page 50 of this manual and is installed on the back panel center.

[U] : Indicates the reference page showing the position of the splice points on the vehicle.

Example : Splice point ”I5” is on the Cowl Wire Harness and is described on page 44 of this manual.

cardiagn.com

B HOW TO USE THIS MANUAL

The ground points circuit diagram shows the connections from all major parts to the respective ground points. When troubleshooting a faulty ground point, checking the system circuits which use a common ground may help you identify the problem ground quickly. The relationship between ground points (EA, IB and IC shown below) can also be checked this way.

I GROUND POINT

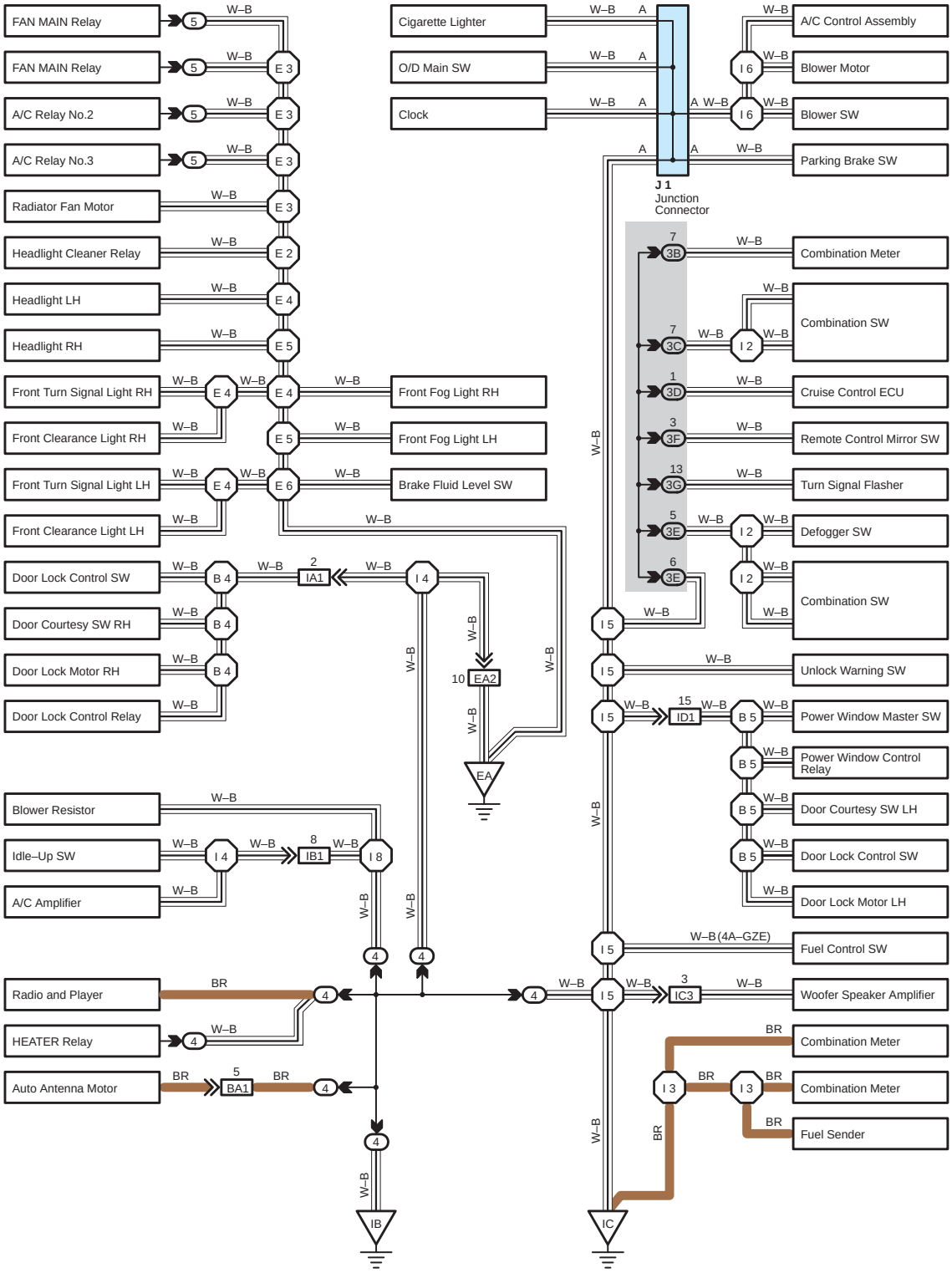

＊ The system shown here is an EXAMPLE ONLY. It is different to the actual circuit shown in the SYSTEM CIRCUITS SECTION.

cardiagn.com

The ”Current Flow Chart” section, describes which parts each power source (fuses, fusible links, and circuit breakers) transmits current to. In the Power Source circuit diagram, the conditions when battery power is supplied to each system are explained. Since all System Circuit diagrams start from the power source, the power source system must be fully understood.

J POWER SOURCE (Current Flow Chart)

The chart below shows the route by which current flows from the battery to each electrical source (Fusible Link, Circuit Breaker, Fuse, etc.) and other parts.

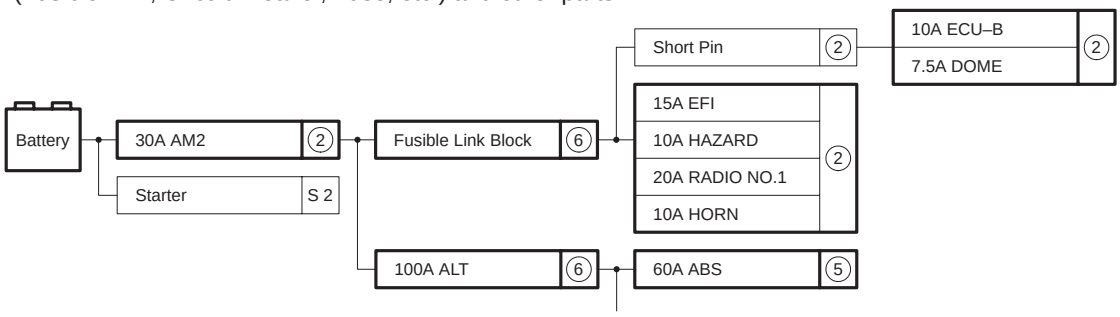

Engine Room R/B (See Page 20)

Fuse		System	Page
20A	STOP	ABS ABS and Traction Control Cruise Control Electronically Controlled Transmission Multiplex Communication System	194 187 180 166 210
10A	DOME	Cigarette Lighter Combination Meter Headlight Interior Light Key Reminder and Seat Belt Warning Light Auto Turn Off Theft Deterrent and Door Lock	214 230 112 122

Power Source

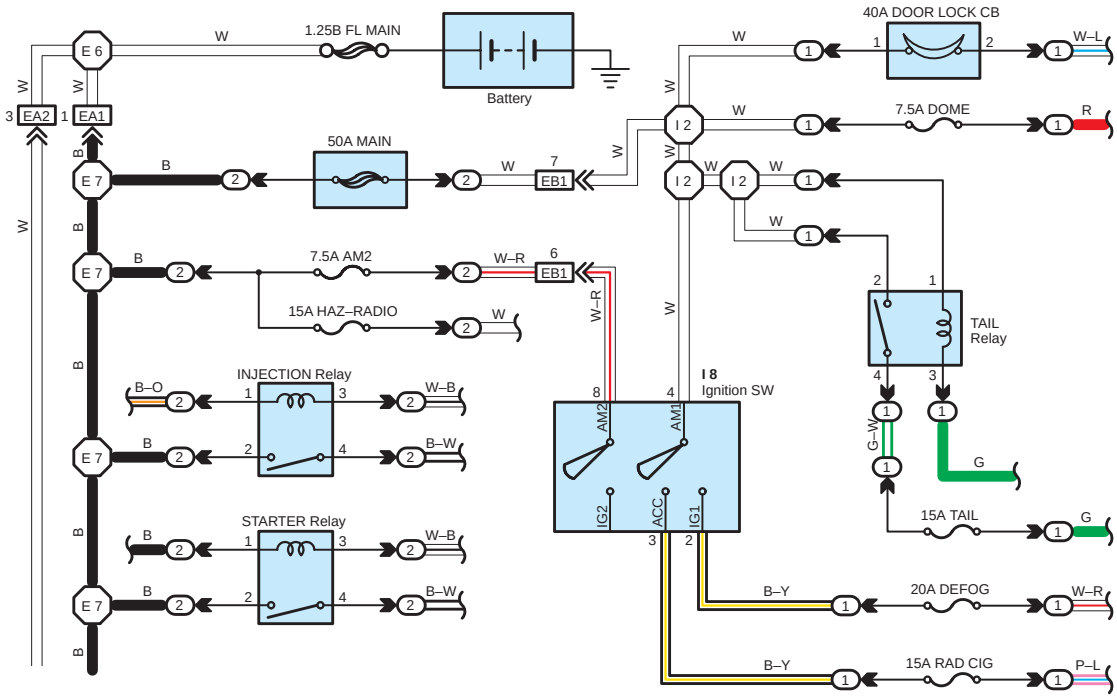

＊ The system shown here is an EXAMPLE ONLY. It is different to the actual circuit shown in the SYSTEM CIRCUITS SECTION.

cardiagn.com

K CONNECTOR LIST

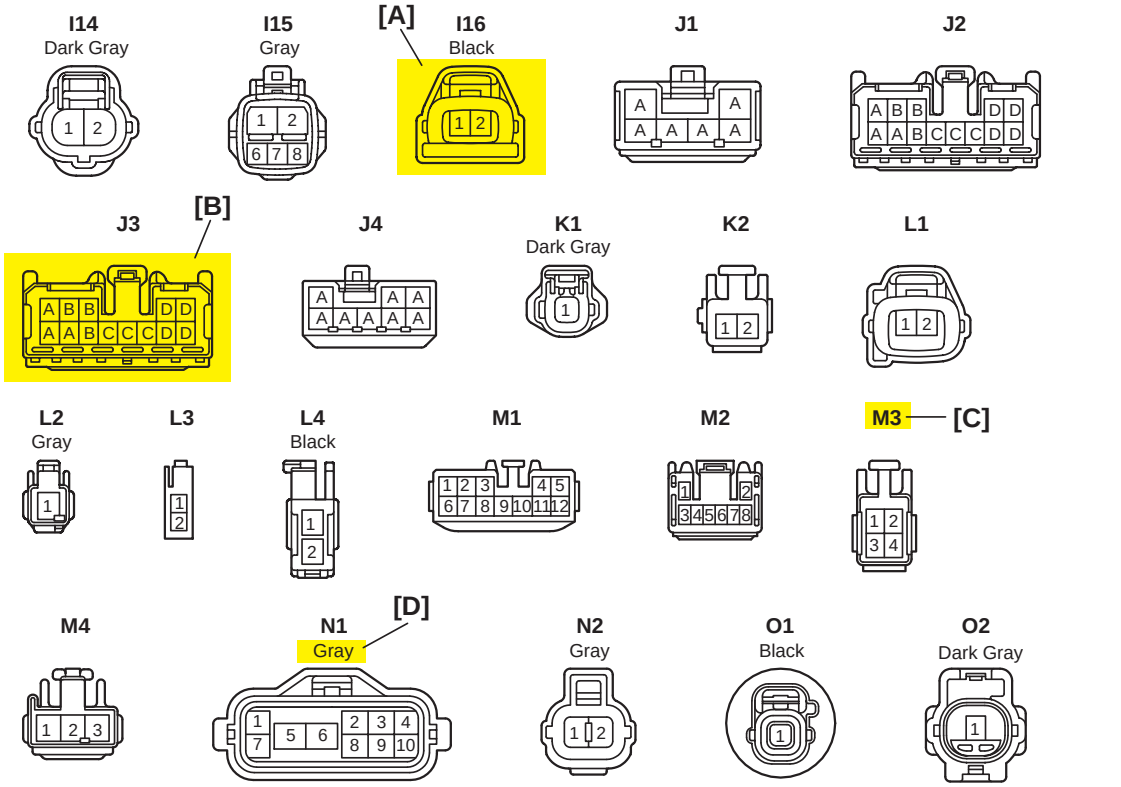

[A] : Indicates connector to be connected to a part. (The numeral indicates the pin No.)

[B] : Junction Connector
Indicates a connector which is connected to a short terminal.

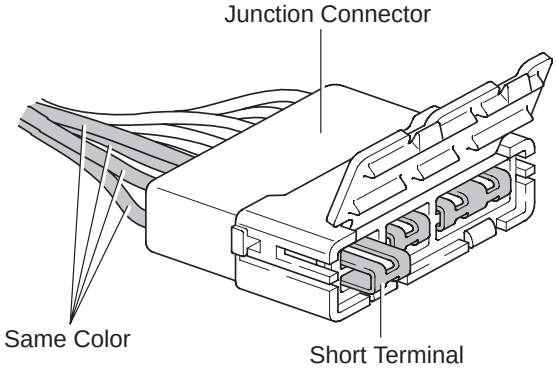

Junction connector in this manual include a short terminal which is connected to a number of wire harnesses. Always perform inspection with the short terminal installed. (When installing the wire harnesses, the harnesses can be connected to any position within the short terminal grouping. Accordingly, in other vehicles, the same position in the short terminal may be connected to a wire harness from a different part.)
Wire harness sharing the same short terminal grouping have the same color.

[C] : Parts Code
The first letter of the code is taken from the first letter of part, and the numbers indicates its order in parts which start with the same letter.

[D] : Connector Color
Connectors not indicated are milky white in color.

cardiagn.com

L PART NUMBER OF CONNECTORS

Code	Part Name	Part Number
A 1	A/C Ambient Temp. Sensor	90980–11070
A 2	A/C Condenser Fan Motor	90980–11237
A 3	A/C Condenser Fan Relay	90980–10940
A 4	A/C Condenser Fan Resistor	90980–10928
A 5	A/C Magnetic Clutch	90980–11271
A 6	A/T Oil Temp. Sensor	90980–11413
[A]	ABS Actuat [B]	909 [C] 151
A 8	ABS Actuator	90980–11009
A 9	ABS Speed Sensor Front LH	90980–10941
A10	ABS Speed Sensor Front RH	90980–11002
A11	Airbag Sensor Front LH	90980–11856
A12	Airbag Sensor Front RH	
A13	[illegible]	90980–11194
[illegible]	[illegible]	90980–11[illegible]

Code	Part Name	Part Number
D 4	Diode (Courtesy)	90980–11608
D 5	Diode (Interior Light)	90980–10962
D 6	Diode (Moon Roof)	90980–11608
D 7	Door Lock Control Relay	90980–10848
D 8	Door Lock Control SW LH	90980–11148
D 9	Door Lock Control SW RH	
D10	Door Courtesy SW LH	90980–11097
D11	Door Courtesy SW RH	
D12	Door Courtesy SW Front LH	90980–11156
D13	Door Courtesy SW Front RH	
D14	Door Courtesy SW Rear LH	
D15	Door Courtesy SW Rear RH	
D16	[illegible] and Unlock SW LH	90980–11170
[illegible]	[illegible] RH	

[A] : Part Code

[B] : Part Name

[C] : Part Number
Toyota Part Number are indicated.

Not all of the above part numbers of the connector are established for the supply.

cardiagn.com

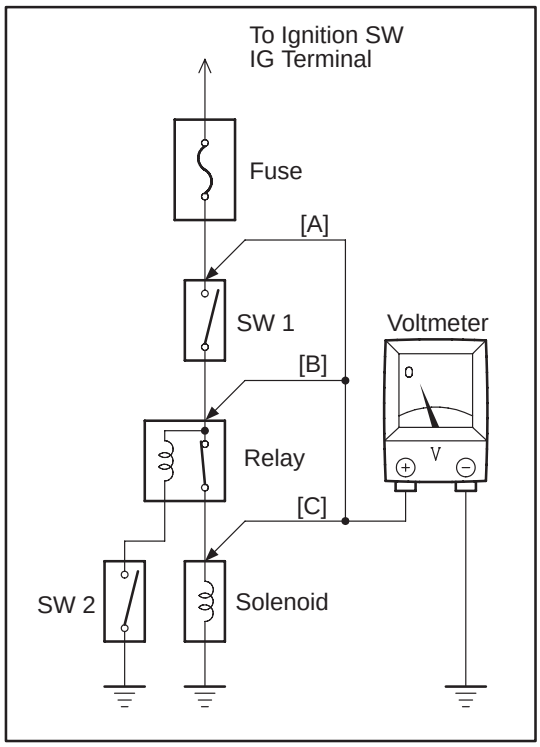

VOLTAGE CHECK

(a) Establish conditions in which voltage is present at the check point.

Example:
[A] – Ignition SW on
[B] – Ignition SW and SW 1 on
[C] – Ignition SW, SW 1 and Relay on (SW 2 off)

(b) Using a voltmeter, connect the negative lead to a good ground point or negative battery terminal, and the positive lead to the connector or component terminal.
This check can be done with a test light instead of a voltmeter.

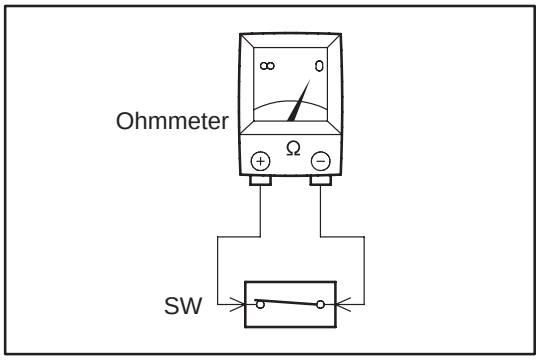

CONTINUITY AND RESISTANCE CHECK

(a) Disconnect the battery terminal or wire so there is no voltage between the check points.

(b) Contact the two leads of an ohmmeter to each of the check points.

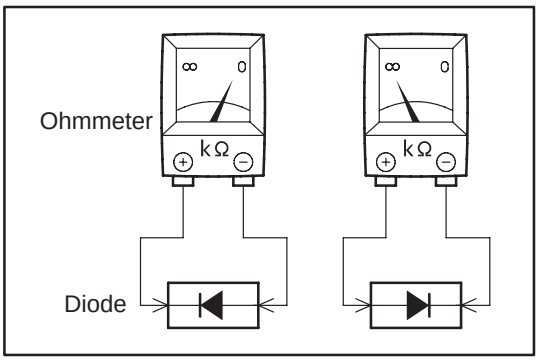

If the circuit has diodes, reverse the two leads and check again.
When contacting the negative lead to the diode positive side and the positive lead to the negative side, there should be continuity.
When contacting the two leads in reverse, there should be no continuity.

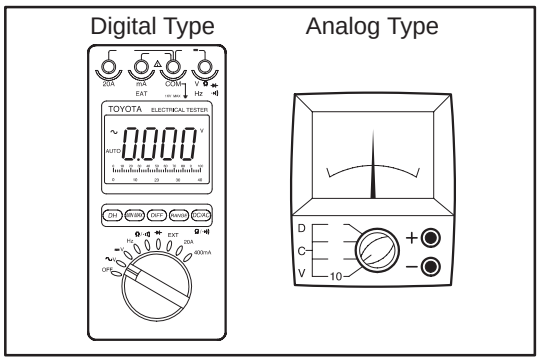

(c) Use a volt/ohmmeter with high impedance (10 kΩ/V minimum) for troubleshooting of the electrical circuit.

cardiagn.com

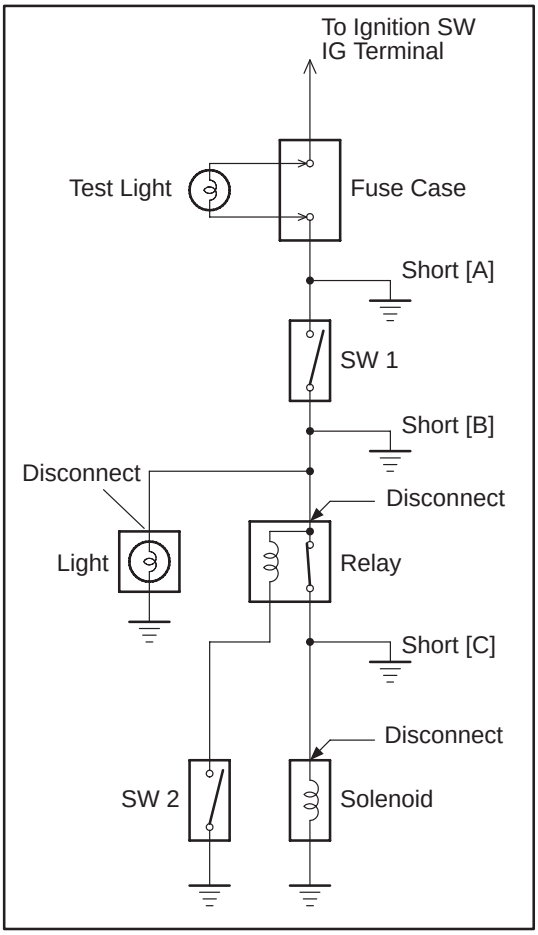

FINDING A SHORT CIRCUIT

(a) Remove the blown fuse and disconnect all loads of the fuse.

(b) Connect a test light in place of the fuse.

(c) Establish conditions in which the test light comes on.

Example:
[A] – Ignition SW on
[B] – Ignition SW and SW 1 on
[C] – Ignition SW, SW 1 and Relay on (Connect the Relay) and SW 2 off (or Disconnect SW 2)

(d) Disconnect and reconnect the connectors while watching the test light.
The short lies between the connector where the test light stays lit and the connector where the light goes out.

(e) Find the exact location of the short by lightly shaking the problem wire along the body.

CAUTION:

(a) Do not open the cover or the case of the ECU unless absolutely necessary. (If the IC terminals are touched, the IC may be destroyed by static electricity.)

(b) When replacing the internal mechanism (ECU part) of the digital meter, be careful that no part of your body or clothing comes in contact with the terminals of leads from the IC, etc. of the replacement part (spare part).

DISCONNECTION OF MALE AND FEMALE CONNECTORS

To pull apart the connectors, pull on the connector itself, not the wire harness.

HINT : Check to see what kind of connector you are disconnecting before pulling apart.

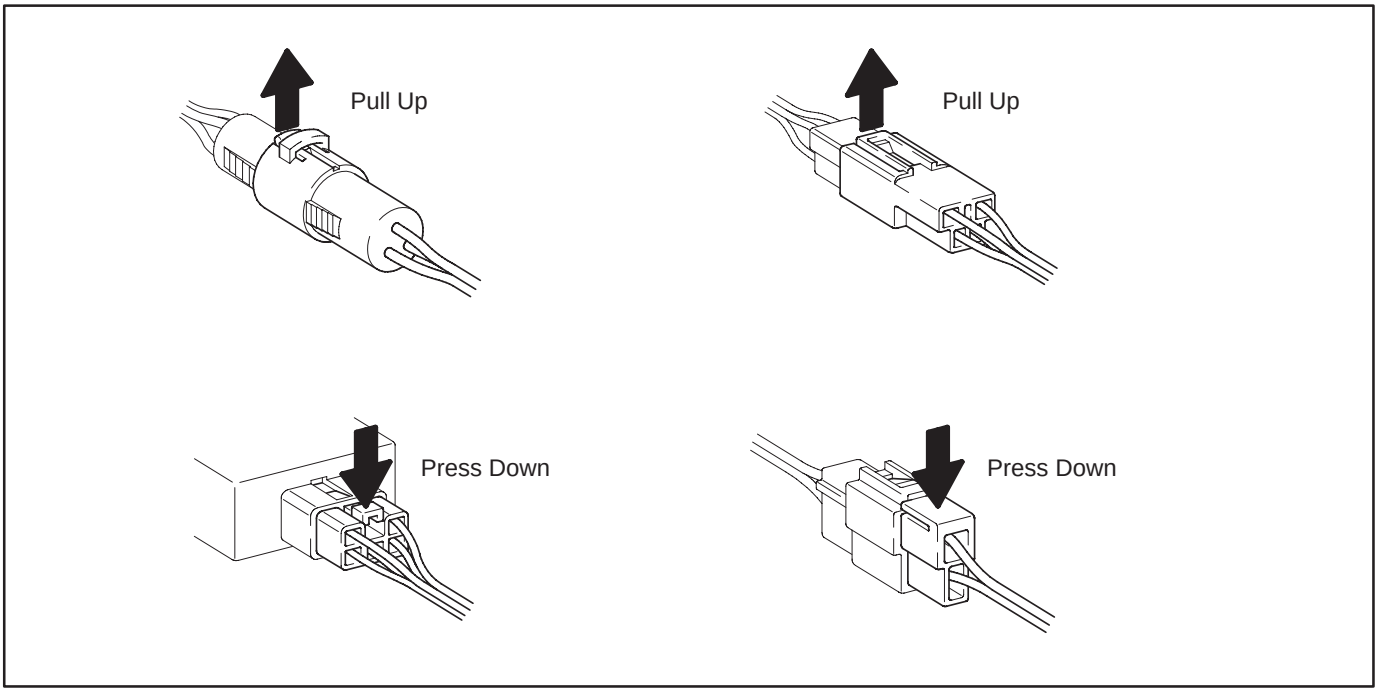

cardiagn.com

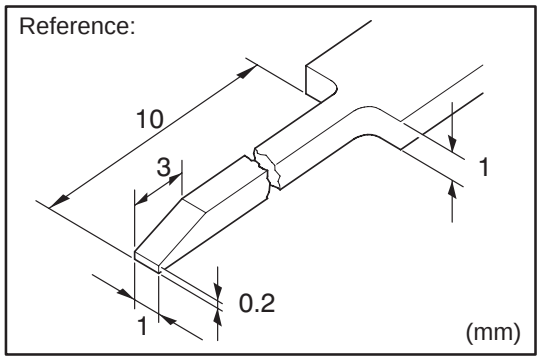

HOW TO REPLACE TERMINAL (with terminal retainer or secondary locking device)

1. PREPARE THE SPECIAL TOOL

   HINT : To remove the terminal from the connector, please construct and use the special tool or like object shown on the left.

2. DISCONNECT CONNECTOR

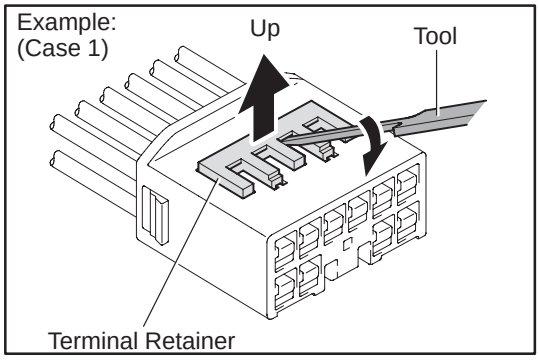

3. DISENGAGE THE SECONDARY LOCKING DEVICE OR TERMINAL RETAINER.

   (a) Locking device must be disengaged before the terminal locking clip can be released and the terminal removed from the connector.

   (b) Use a special tool or the terminal pick to unlock the secondary locking device or terminal retainer.

   NOTICE:
   Do not remove the terminal retainer from connector body.

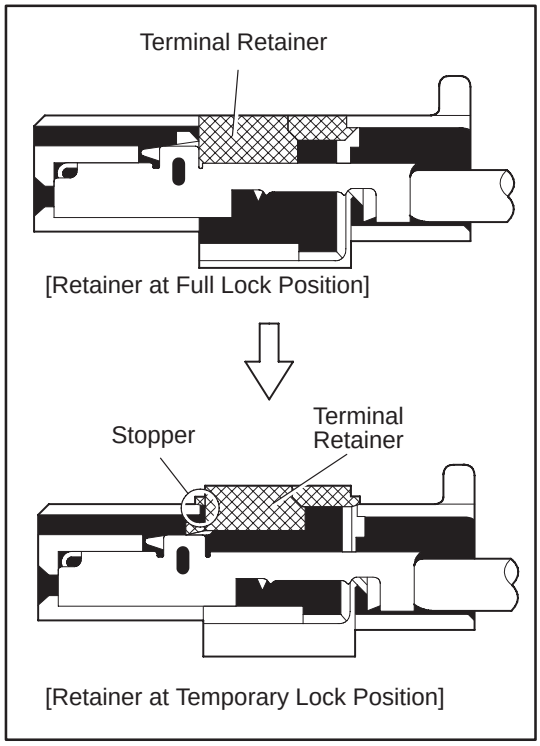

[A] For Non–Waterproof Type Connector

HINT : The needle insertion position varies according to the connector's shape (number of terminals etc.), so check the position before inserting it.

"Case 1"

Raise the terminal retainer up to the temporary lock position.

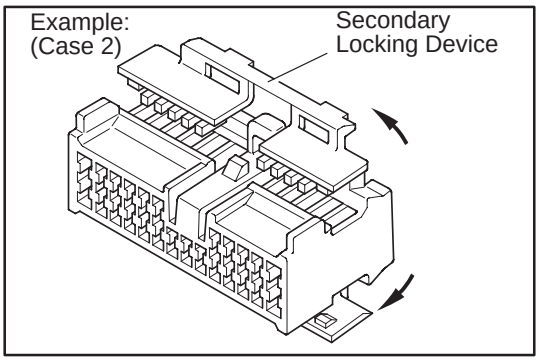

"Case 2"

Open the secondary locking device.

cardiagn.com

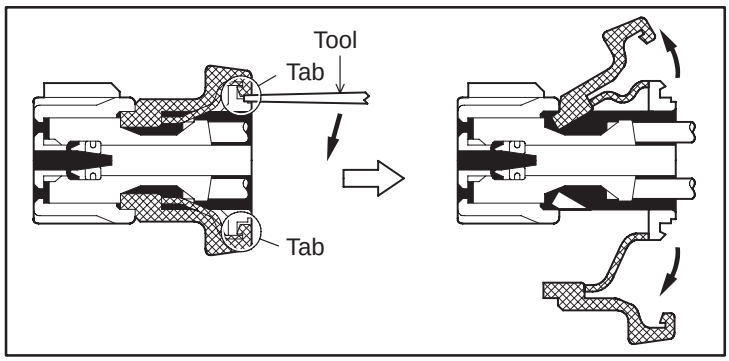

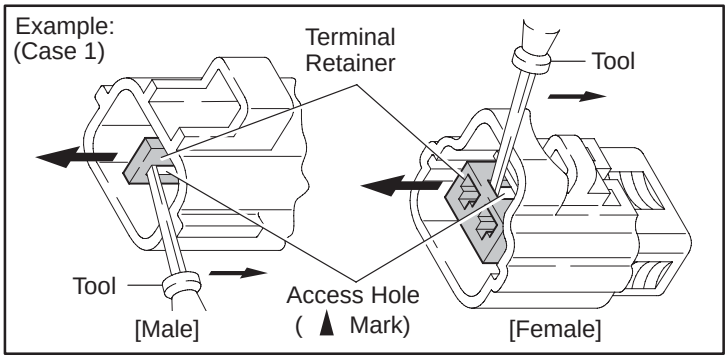

[B] For Waterproof Type Connector

HINT : Terminal retainer color is different according to connector body.

Example:

Terminal Retainer	: Connector Body
Black or White	: Gray
Black or White	: Dark Gray
Gray or White	: Black

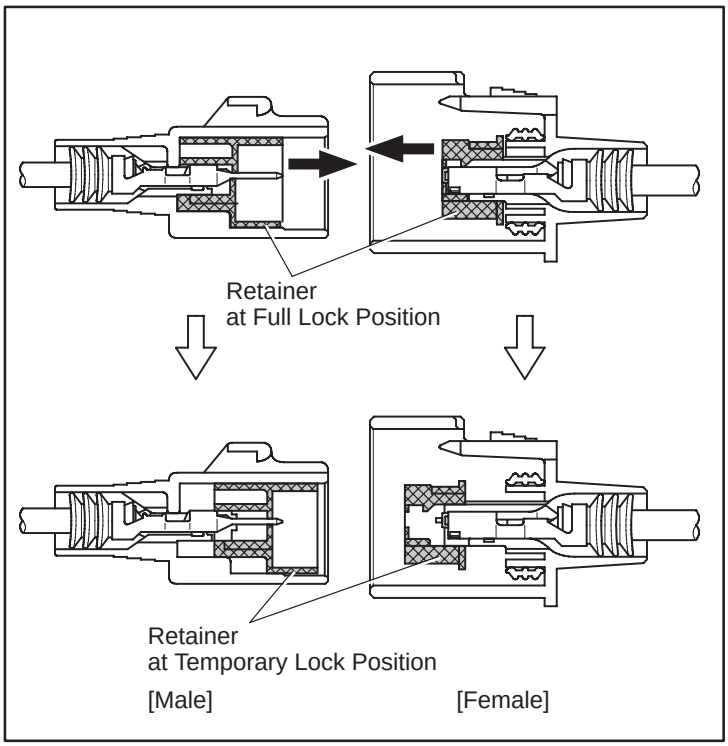

”Case 1”

Type where terminal retainer is pulled up to the temporary lock position (Pull Type).

Insert the special tool into the terminal retainer access hole (▲Mark) and pull the terminal retainer up to the temporary lock position.

HINT : The needle insertion position varies according to the connector’s shape (Number of terminals etc.), so check the position before inserting it.

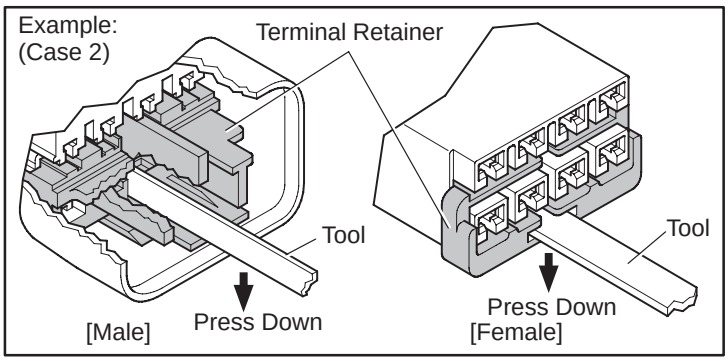

”Case 2”

Type which cannot be pulled as far as Power Lock insert the tool straight into the access hole of terminal retainer as shown.

cardiagn.com

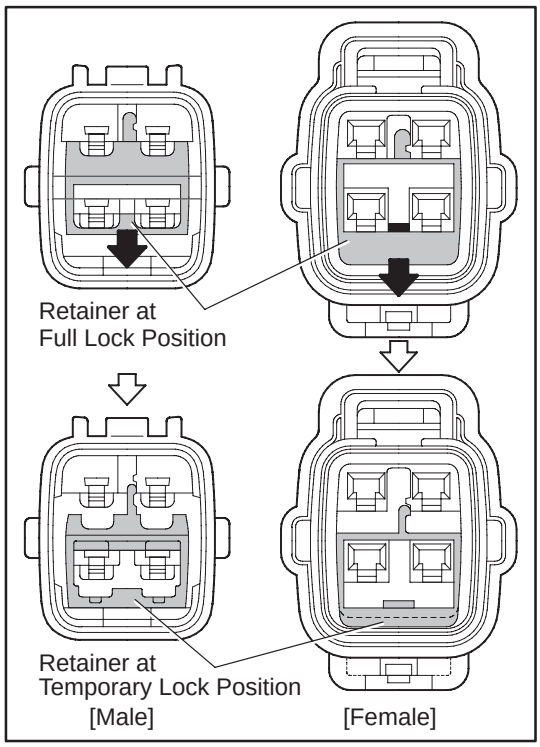

Push the terminal retainer down to the temporary lock position.

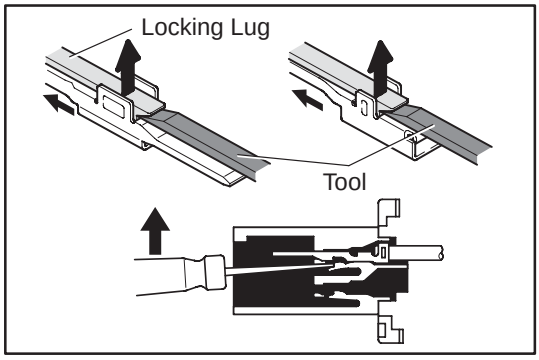

(c) Release the locking lug from terminal and pull the terminal out from rear.

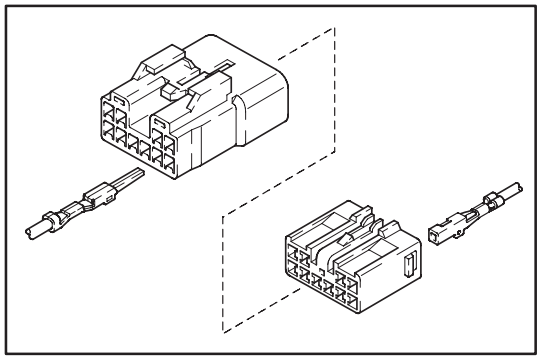

4. INSTALL TERMINAL TO CONNECTOR

(a) Insert the terminal.

HINT:
1. Make sure the terminal is positioned correctly.
2. Insert the terminal until the locking lug locks firmly.
3. Insert the terminal with terminal retainer in the temporary lock position.

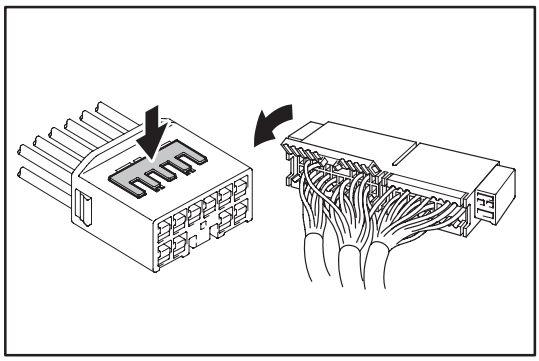

(b) Push the secondary locking device or terminal retainer in to the full lock position.

5. CONNECT CONNECTOR

cardiagn.com

ABBREVIATIONS

The following abbreviations are used in this manual.

2WD	=	Two Wheel Drive Vehicles
4WD	=	Four Wheel Drive Vehicles
A/C	=	Air Conditioner
A/T	=	Automatic Transmission
ABS	=	Anti–Lock Brake System
ADD	=	Automatic Disconnecting Differential
CAN	=	Controller Area Network
CD	=	Compact Disc
DLC3	=	Data Link Connector 3
ECT	=	Electronic Control Transmission
ECU	=	Electronic Control Unit
EDU	=	Electronic Driving Unit
EGR	=	Exhaust Gas Recirculation
IC	=	Integrated Circuit
INT	=	Intermittent
J/B	=	Junction Block
LCD	=	Liquid Crystal Display
LH	=	Left–Hand
M/T	=	Manual Transmission
R/B	=	Relay Block
RH	=	Right–Hand
SRS	=	Supplemental Restraint System
SW	=	Switch
TEMP.	=	Temperature
VRV	=	Vacuum Regulating Valve
VSV	=	Vacuum Switching Valve
w/	=	With
w/o	=	Without

∗ The titles given inside the components are the names of the terminals (terminal codes) and are not treated as being abbreviations.

cardiagn.com

E GLOSSARY OF TERMS AND SYMBOLS

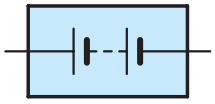

BATTERY
Stores chemical energy and converts it into electrical energy. Provides DC current for the auto's various electrical circuits.

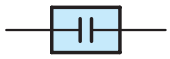

CAPACITOR (Condenser)
A small holding unit for temporary storage of electrical voltage.

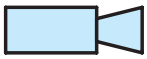

CIGARETTE LIGHTER
An electric resistance heating element.

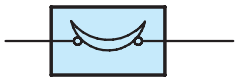

CIRCUIT BREAKER
Basically a reusable fuse, a circuit breaker will heat and open if too much current flows through it. Some units automatically reset when cool, others must be manually reset.

DIODE
A semiconductor which allows current flow in only one direction.

DIODE, ZENER
A diode which allows current flow in one direction but blocks reverse flow only up to a specific voltage. Above that potential, it passes the excess voltage. This acts as a simple voltage regulator.

PHOTODIODE
The photodiode is a semiconductor which controls the current flow according to the amount of light.

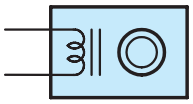

DISTRIBUTOR, IIA
Channels high–voltage current from the ignition coil to the individual spark plugs.

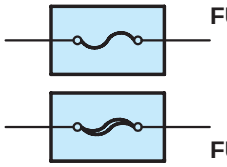

(for Medium Current Fuse)

(for High Current Fuse or Fusible Link)

FUSE
A thin metal strip which burns through when too much current flows through it, thereby stopping current flow and protecting a circuit from damage.

FUSIBLE LINK
A heavy–gauge wire placed in high amperage circuits which burns through on overloads, thereby protecting the circuit. The numbers indicate the crosssection surface area of the wires.

GROUND
The point at which wiring attaches to the Body, thereby providing a return path for an electrical circuit; without a ground, current cannot flow.

1. SINGLE FILAMENT

2. DOUBLE FILAMENT

HEADLIGHTS
Current flow causes a headlight filament to heat up and emit light. A headlight may have either a single (1) filament or a double (2) filament

HORN
An electric device which sounds a loud audible signal.

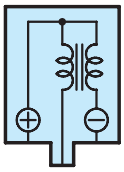

IGNITION COIL
Converts low–voltage DC current into high–voltage ignition current for firing the spark plugs.

LIGHT
Current flow through a filament causes the filament to heat up and emit light.

LED (LIGHT EMITTING DIODE)
Upon current flow, these diodes emit light without producing the heat of a comparable light.

METER, ANALOG
Current flow activates a magnetic coil which causes a needle to move, thereby providing a relative display against a background calibration.

METER, DIGITAL
Current flow activates one or many LED's, LCD's, or fluorescent displays, which provide a relative or digital display.

MOTOR
A power unit which converts electrical energy into mechanical energy, especially rotary motion.

cardiagn.com

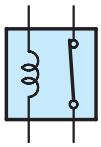

RELAY

1. NORMALLY CLOSED

Basically, an electrically operated switch which may be normally closed (1) or open (2).
Current flow through a small coil creates a magnetic field which either opens or closes an attached switch.

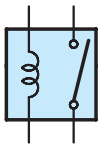

2. NORMALLY OPEN

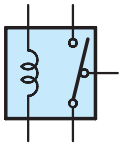

RELAY, DOUBLE THROW

A relay which passes current through one set of contacts or the other.

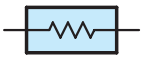

RESISTOR

An electrical component with a fixed resistance, placed in a circuit to reduce voltage to a specific value.

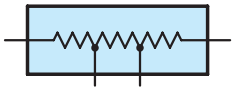

RESISTOR, TAPPED

A resistor which supplies two or more different non adjustable resistance values.

RESISTOR, VARIABLE or RHEOSTAT

A controllable resistor with a variable rate of resistance.
Also called a potentiometer or rheostat.

SENSOR (Thermistor)

A resistor which varies its resistance with temperature.

(Reed Switch Type)

SENSOR, SPEED

Uses magnetic impulses to open and close a switch to create a signal for activation of other components.

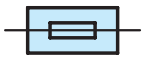

SHORT PIN

Used to provide an unbroken connection within a junction block.

SOLENOID

An electromagnetic coil which forms a magnetic field when current flows, to move a plunger, etc.

SPEAKER

An electromechanical device which creates sound waves from current flow.

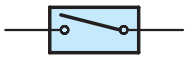

SWITCH, MANUAL

1. NORMALLY OPEN

Opens and closes circuits, thereby stopping (1) or allowing (2) current flow.

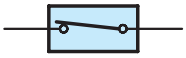

2. NORMALLY CLOSED

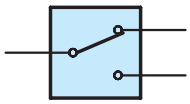

SWITCH, DOUBLE THROW

A switch which continuously passes current through one set of contacts or the other.

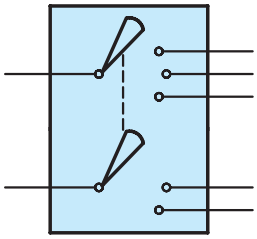

SWITCH, IGNITION

A key operated switch with several positions which allows various circuits, particularly the primary ignition circuit, to become operational.

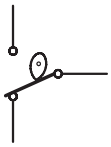

SWITCH, WIPER PARK

Automatically returns wipers to the stop position when the wiper switch is turned off.

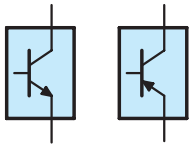

TRANSISTOR

A solidstate device typically used as an electronic relay; stops or passes current depending on the voltage applied at ”base”.

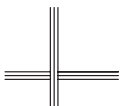

WIRES

(1) NOT CONNECTED

Wires are always drawn as straight lines on wiring diagrams.
Crossed wires (1) without a black dot at the junction are not joined;
crossed wires (2) with a black dot or octagonal (⬡) mark at the junction are spliced (joined) connections.

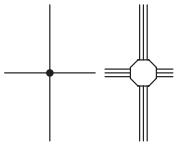

(2) SPLICED

cardiagn.com

[Engine Compartment]

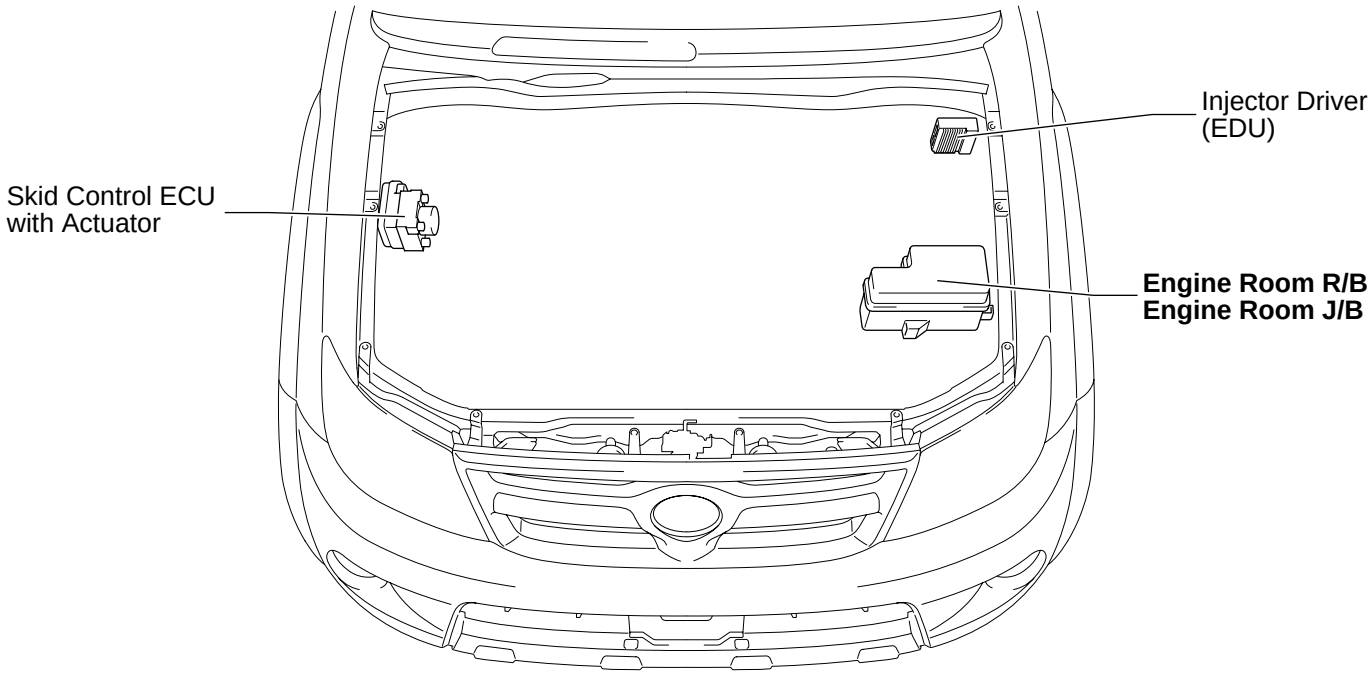

cardiagn.com

[Instrument Panel]

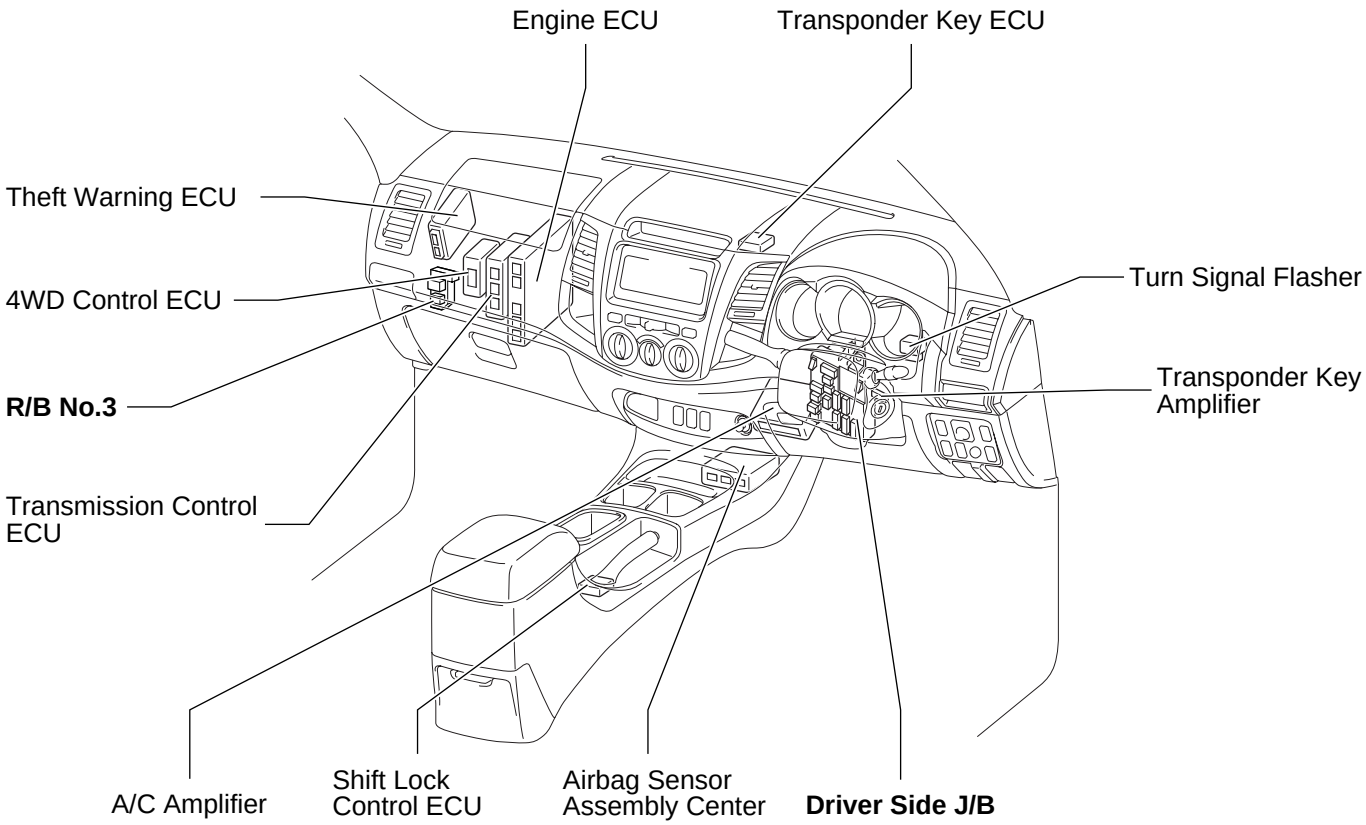

cardiagn.com

F RELAY LOCATIONS

① : Engine Room R/B	Engine Compartment Left (See Page 20)
⬭ : Engine Room J/B	

(Inner Circuit : See Page 26)

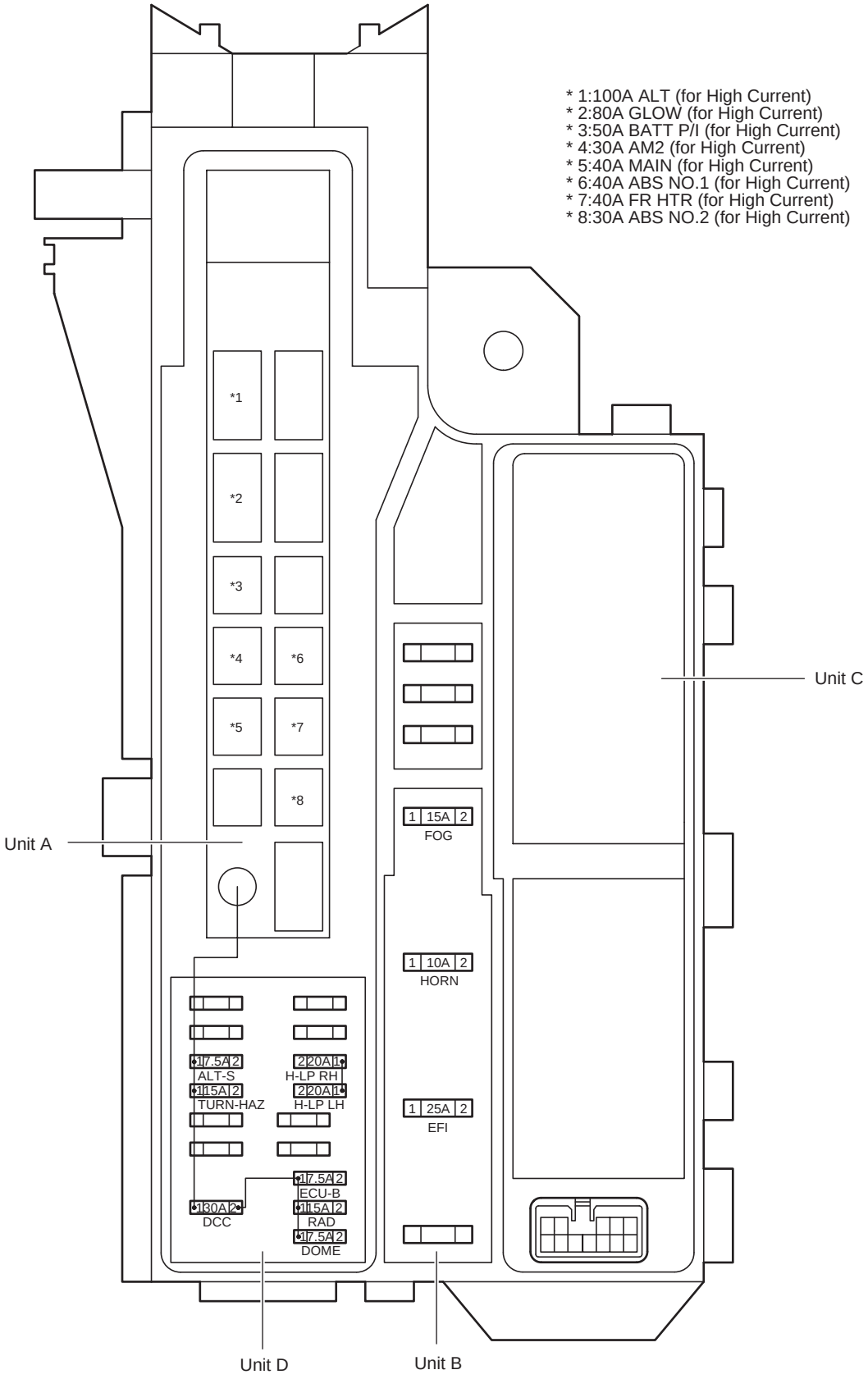

cardiagn.com

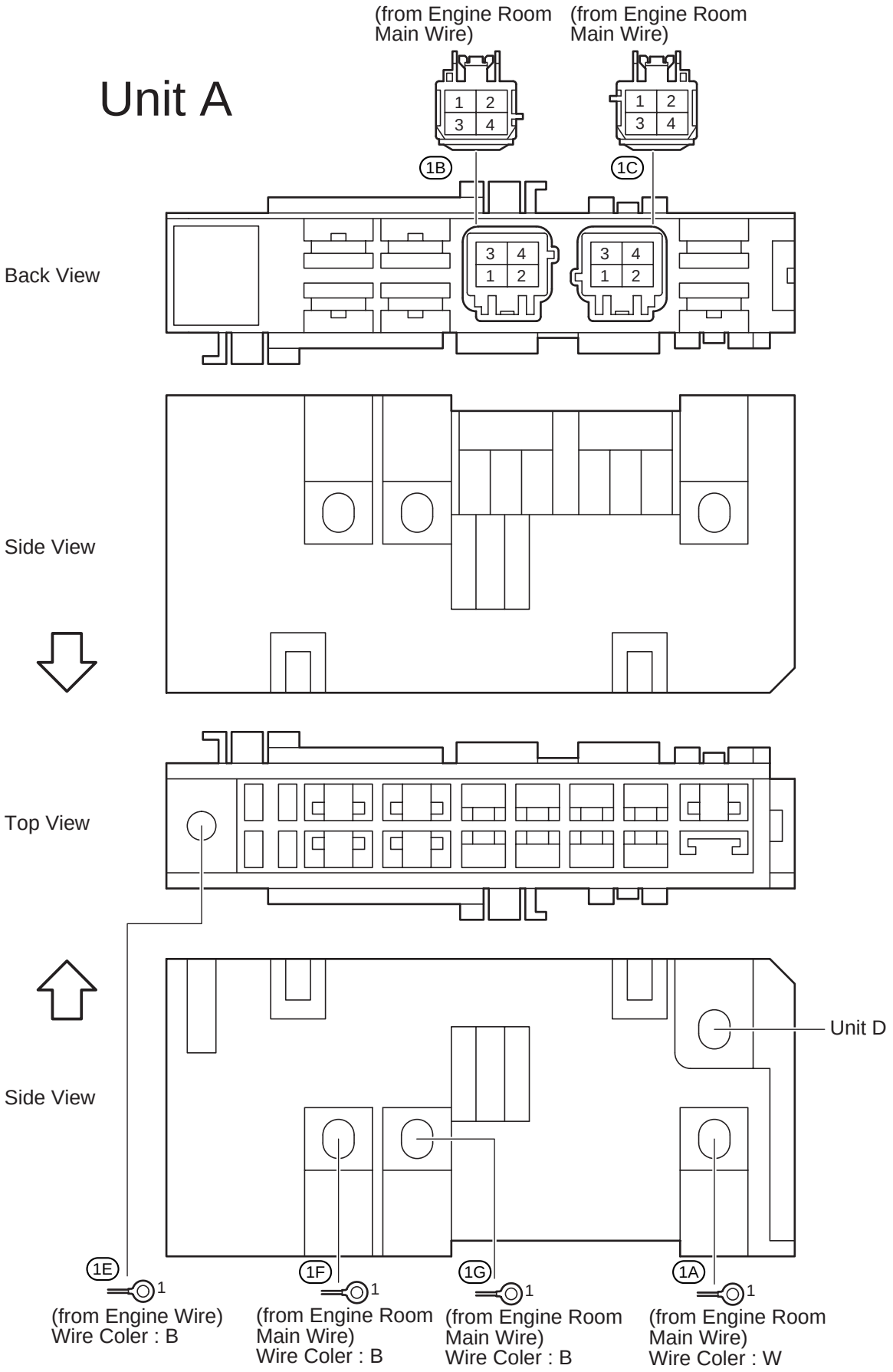

cardiagn.com

① : Engine Room R/B	Engine Compartment Left (See Page 20)
⬭ : Engine Room J/B	

Unit B

(Inner Circuit : See Page 27)

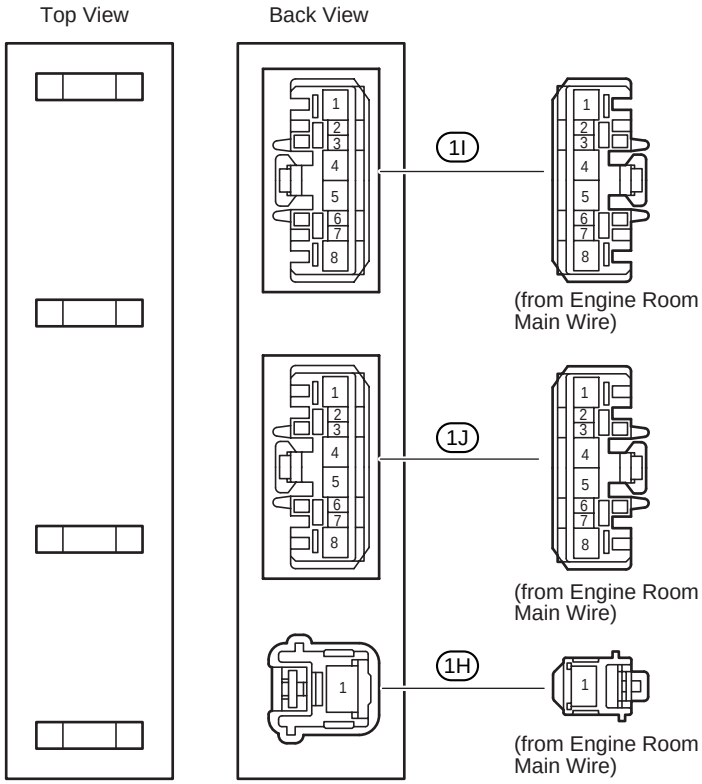

Unit C

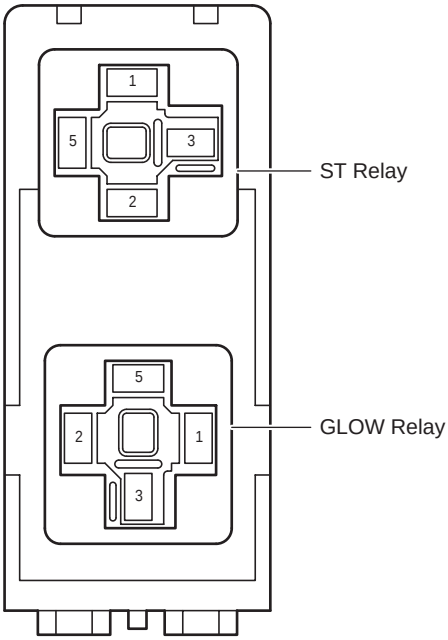

cardiagn.com

cardiagn.com

[Engine Room R/B and Engine Room J/B Inner Circuit]

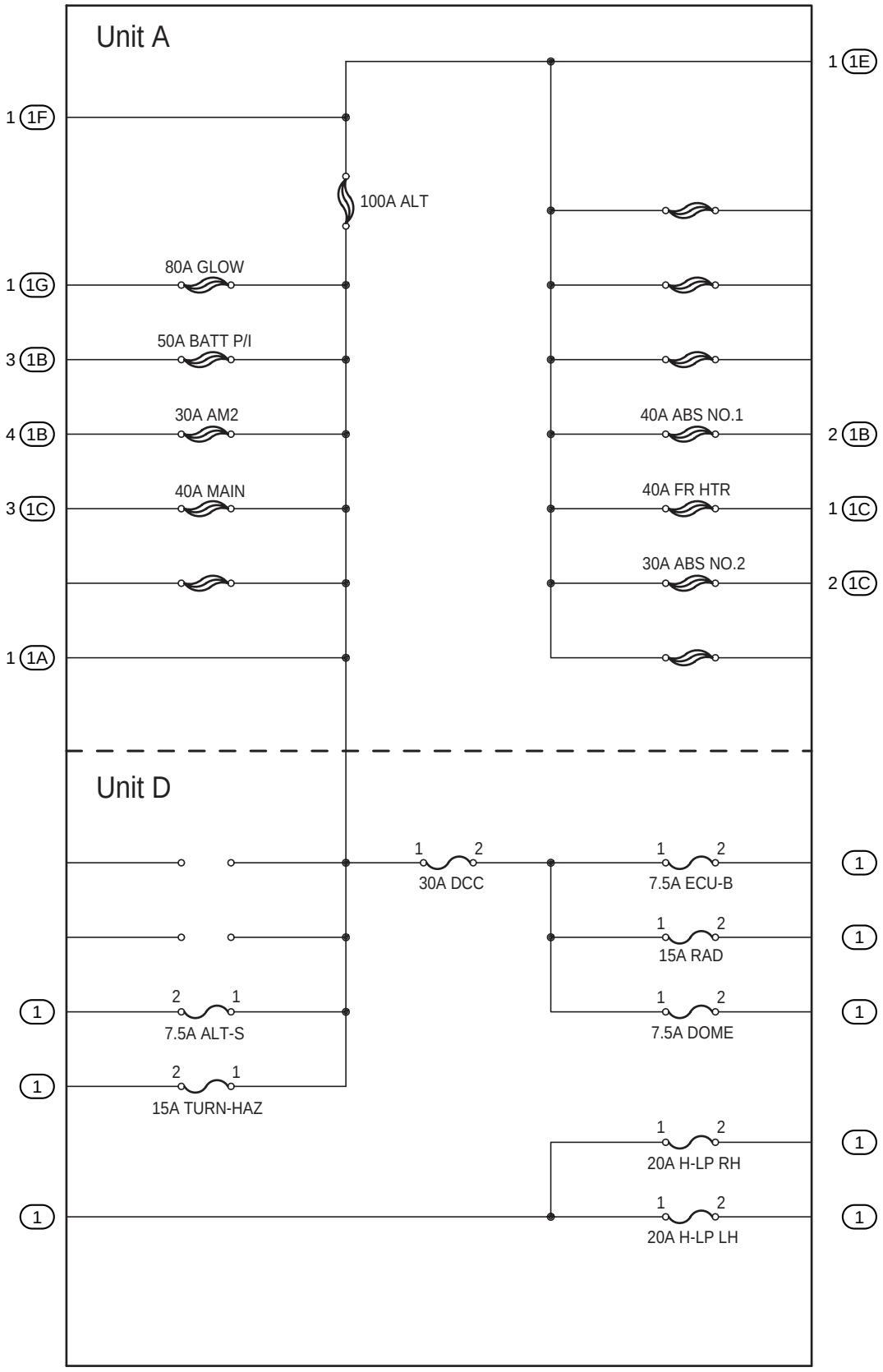

cardiagn.com

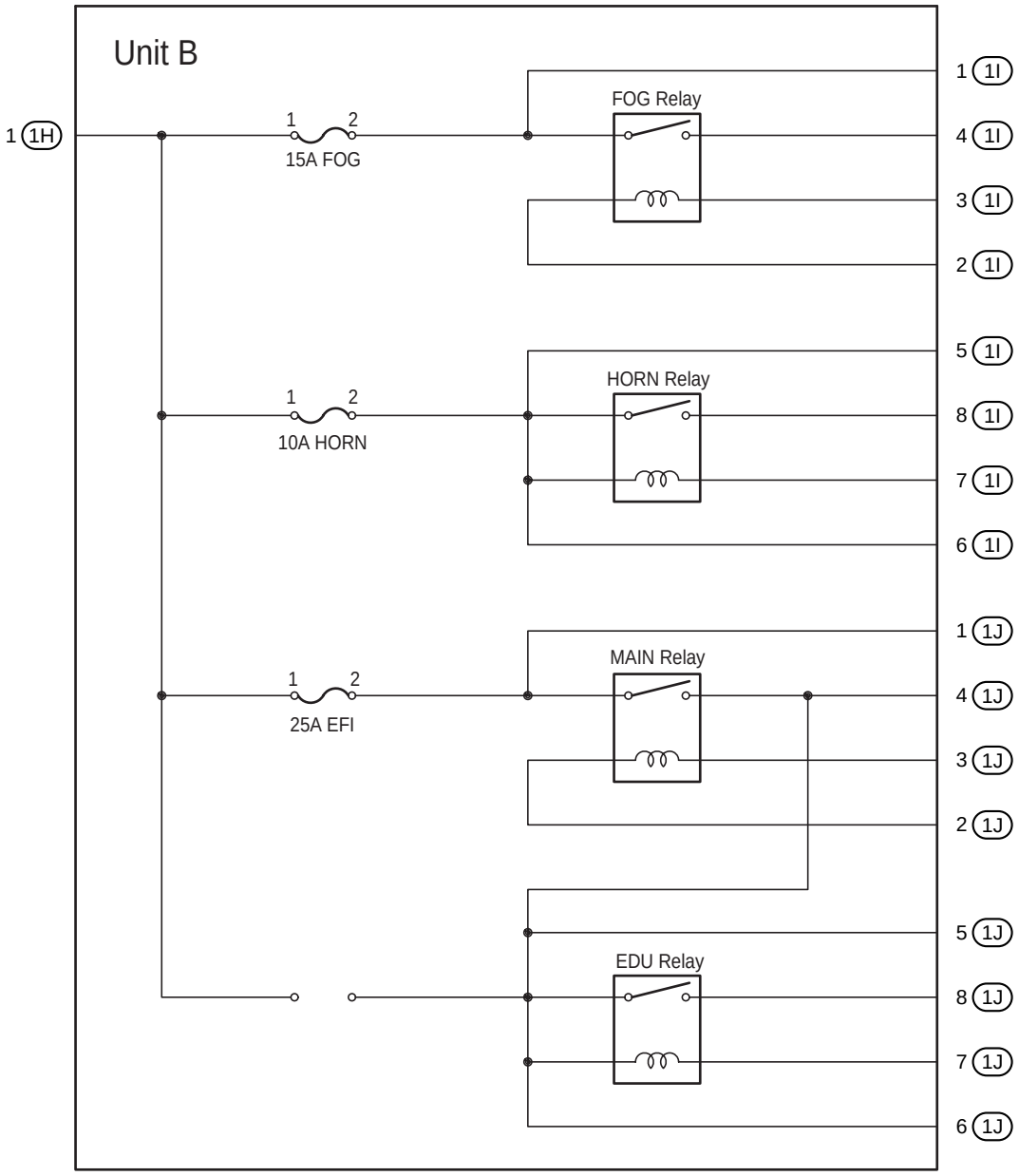

cardiagn.com

F RELAY LOCATIONS

: Driver Side J/B	Instrument Panel Brace RH (See Page 21)

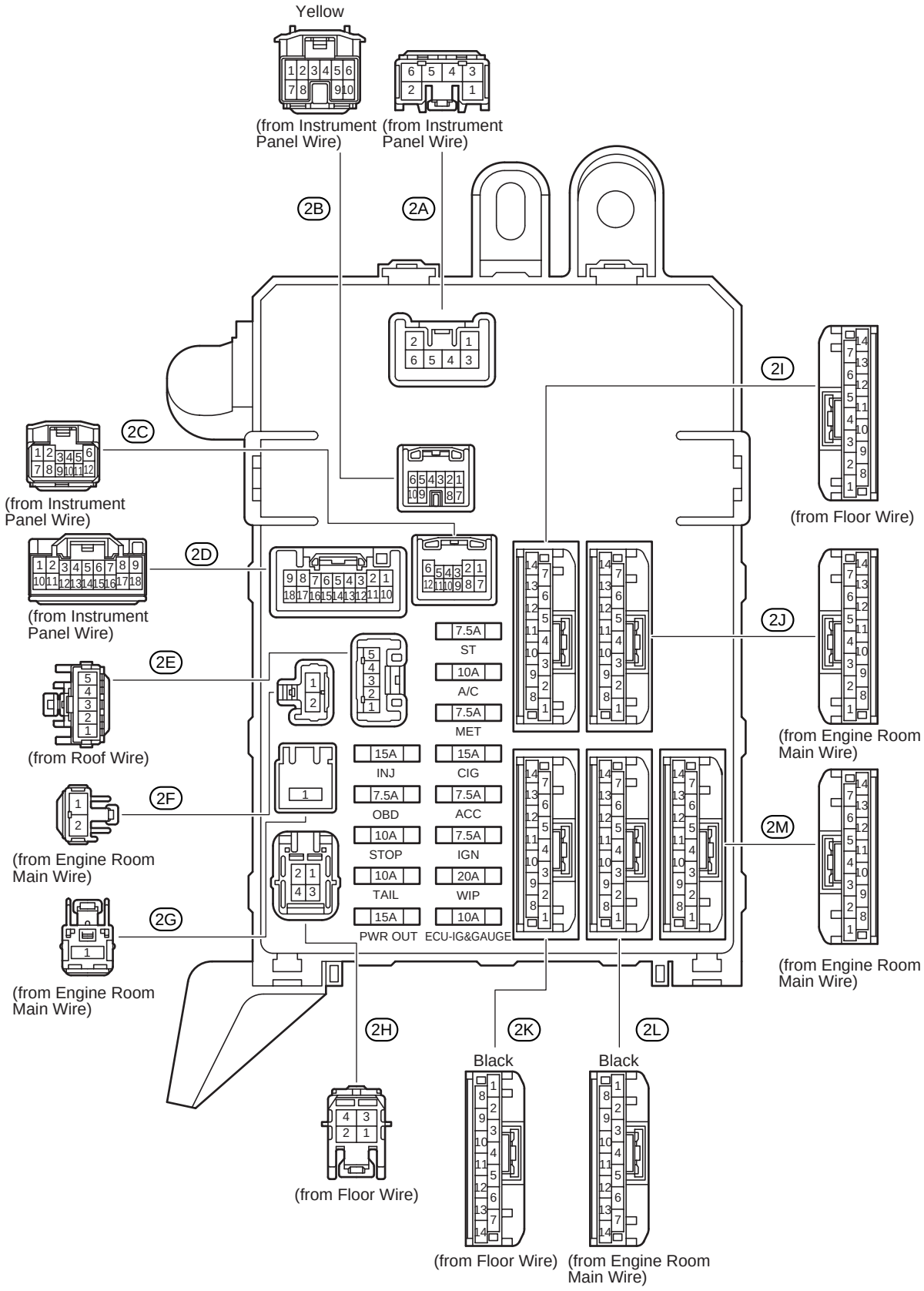

cardiagn.com

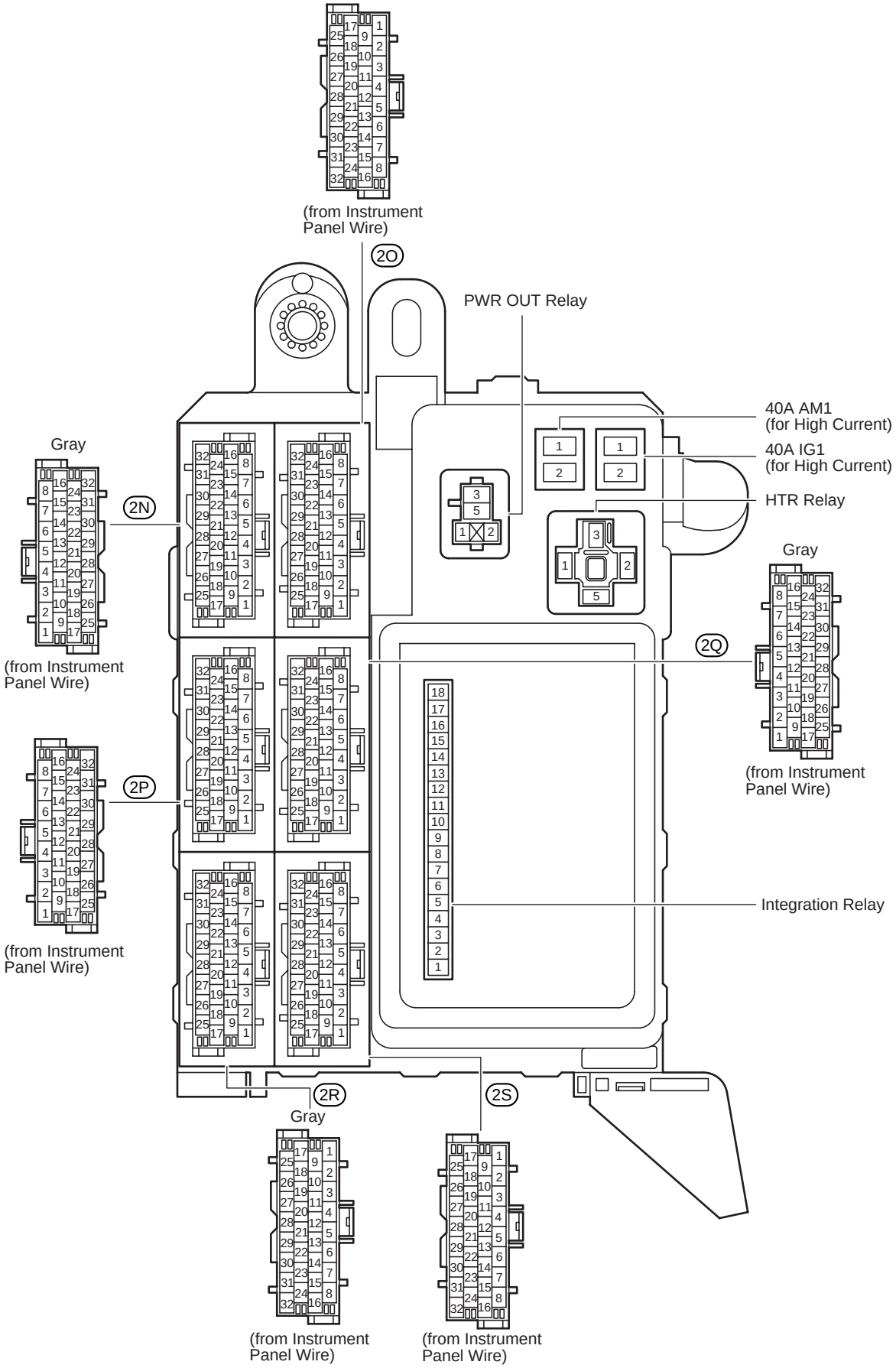

cardiagn.com

[Driver Side J/B Inner Circuit]

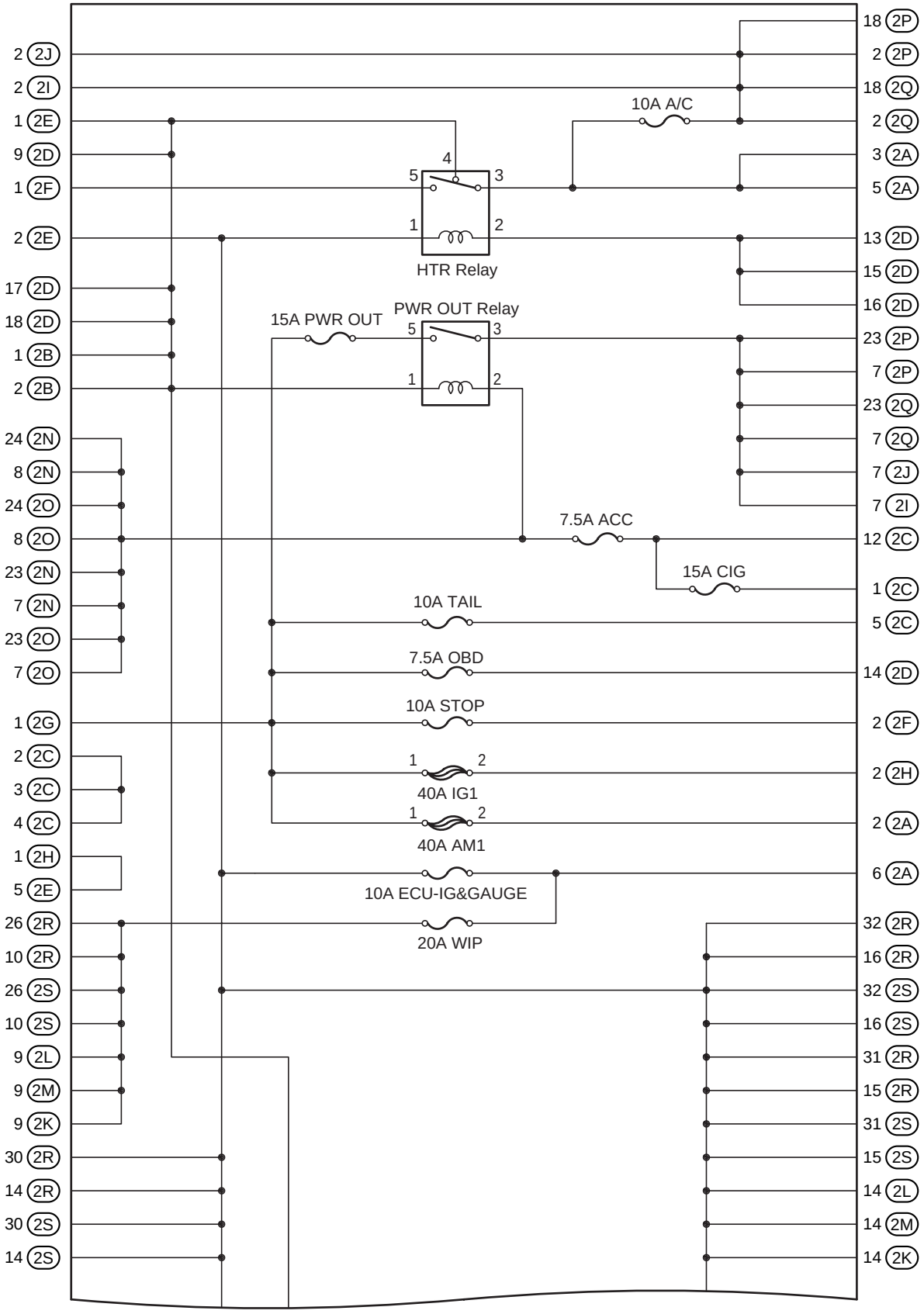

(Cont. Next Page)

cardiagn.com

(Cont'd)

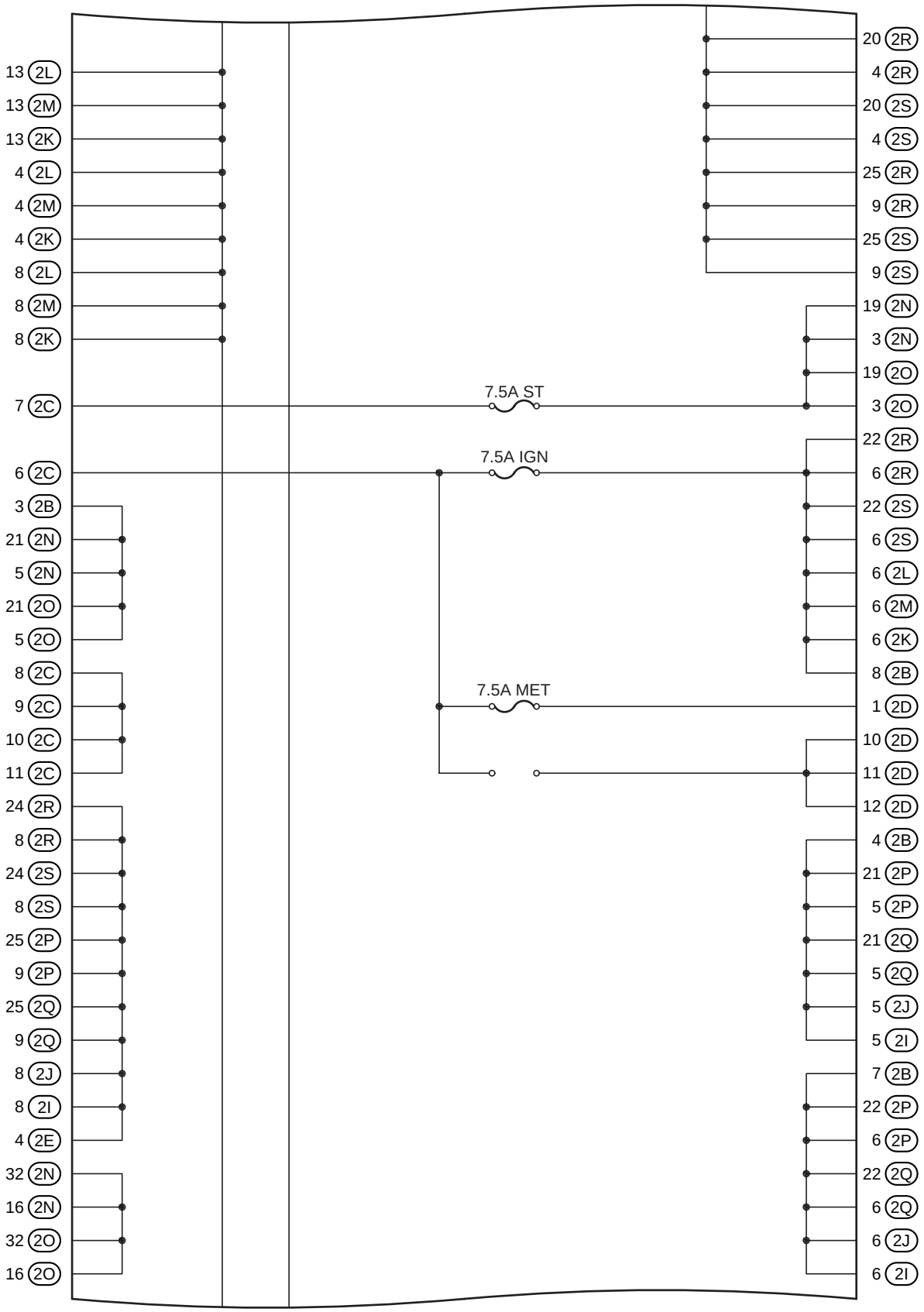

(Cont. Next Page)

cardiagn.com

[Driver Side J/B Inner Circuit]

(Cont'd)

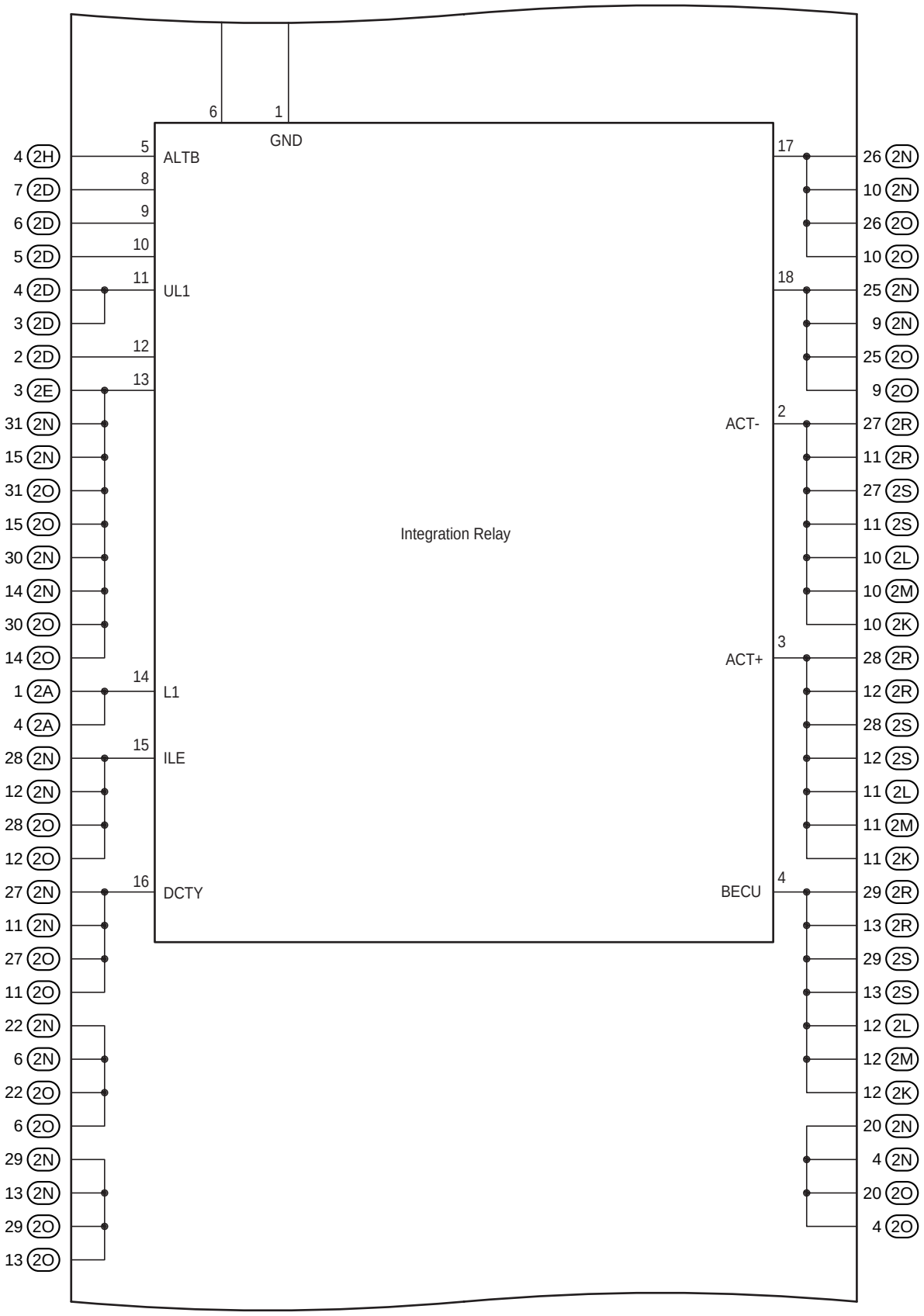

(Cont. Next Page)

cardiagn.com

(Cont'd)

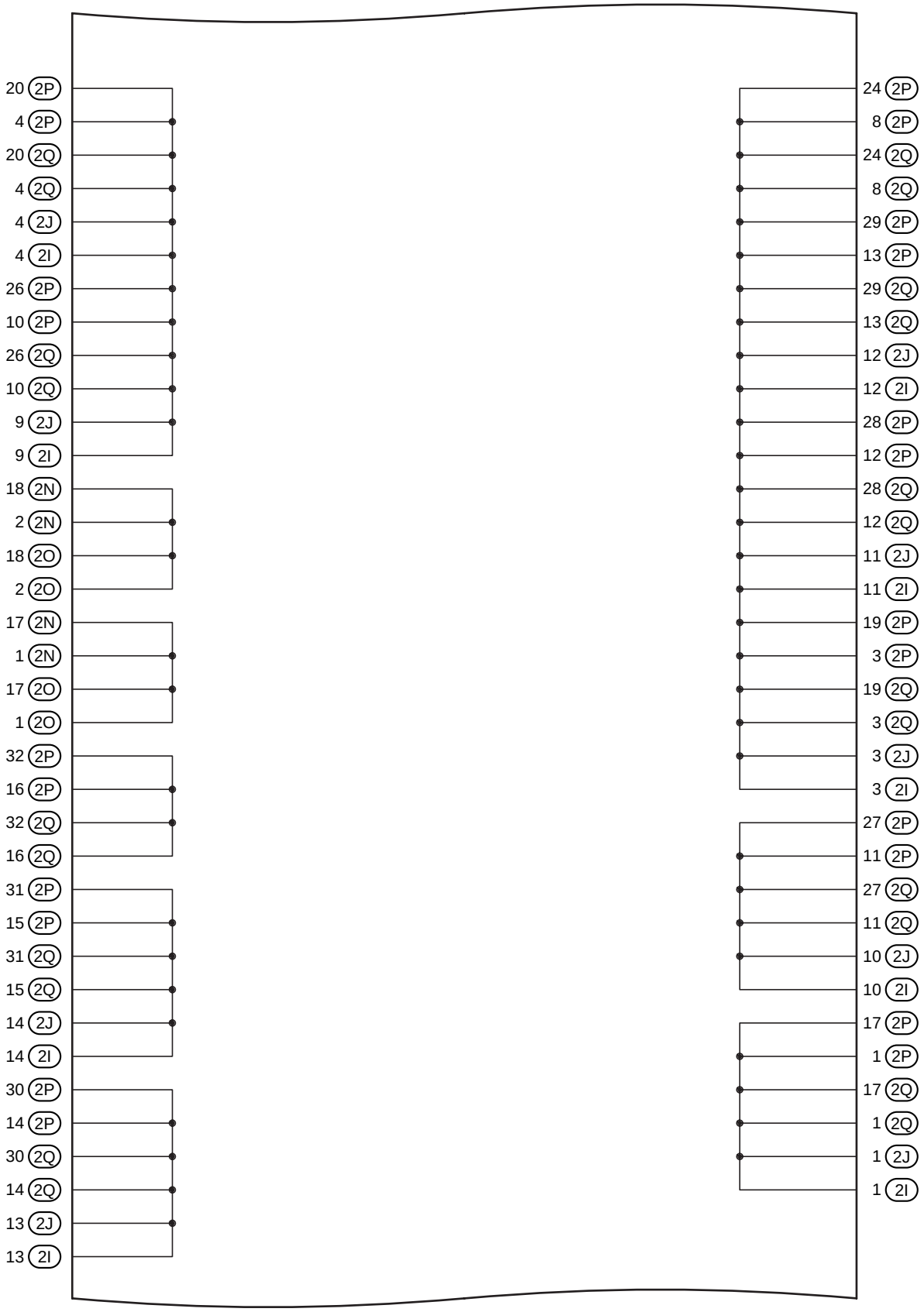

(Cont. Next Page)

cardiagn.com

[Driver Side J/B Inner Circuit]

(Cont'd)

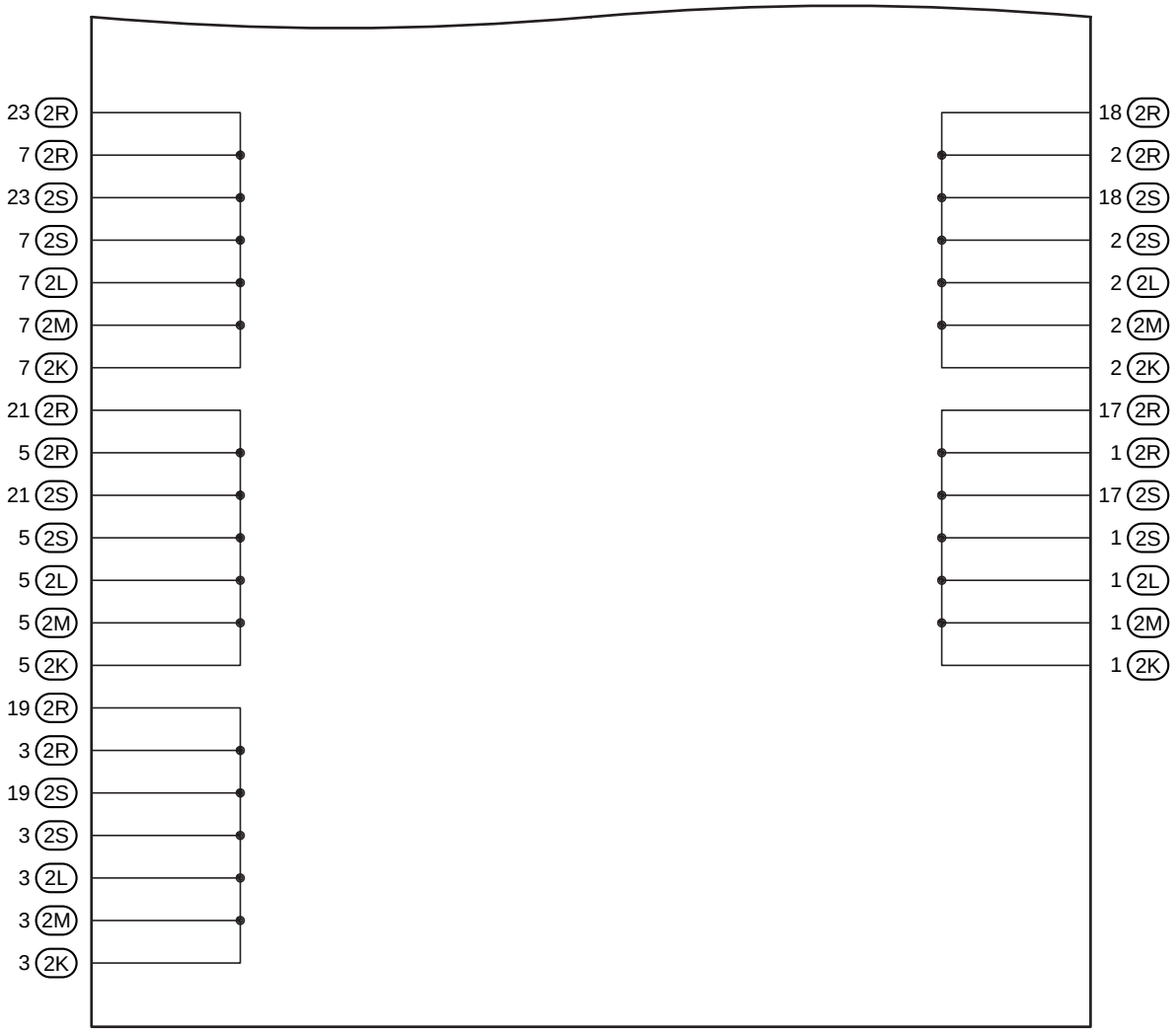

cardiagn.com

③ : R/B No.3	Cowl Side Panel LH (See Page 21)

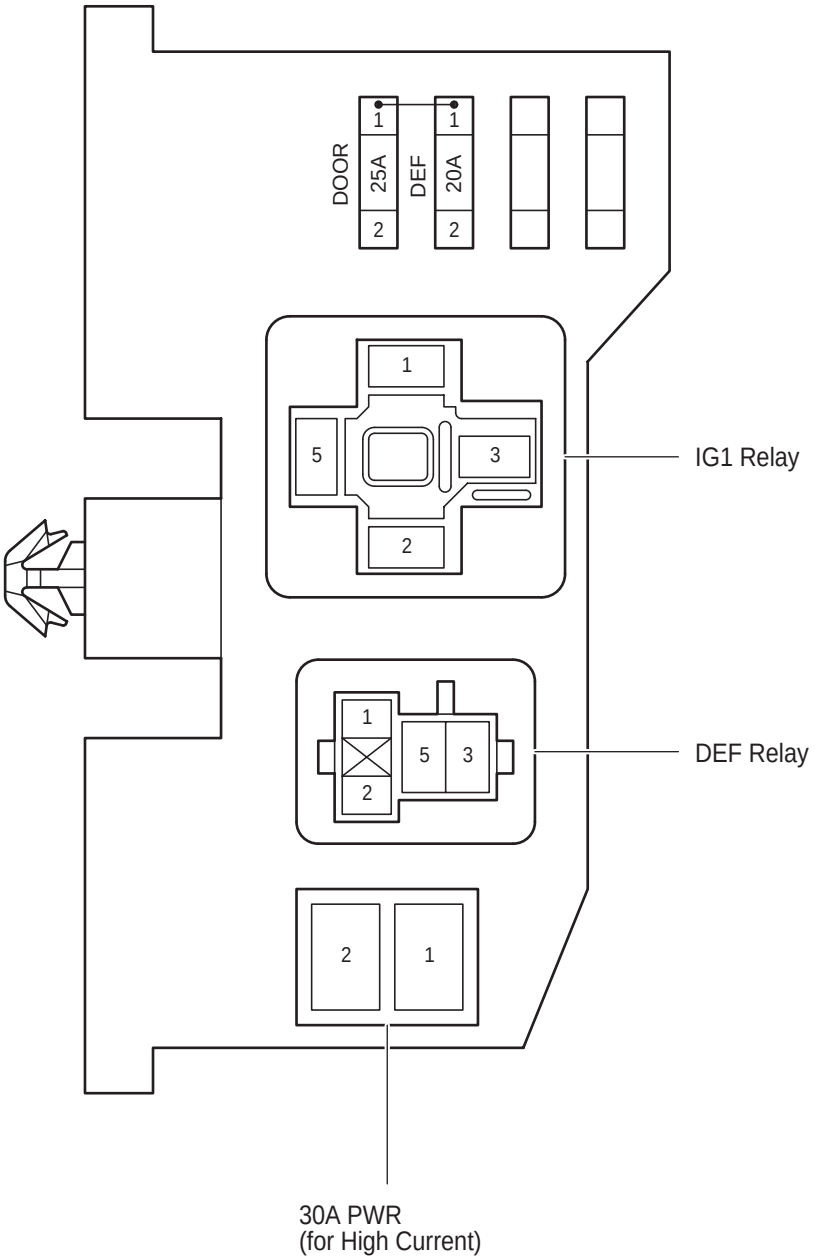

cardiagn.com

Position of Parts in Engine Compartment

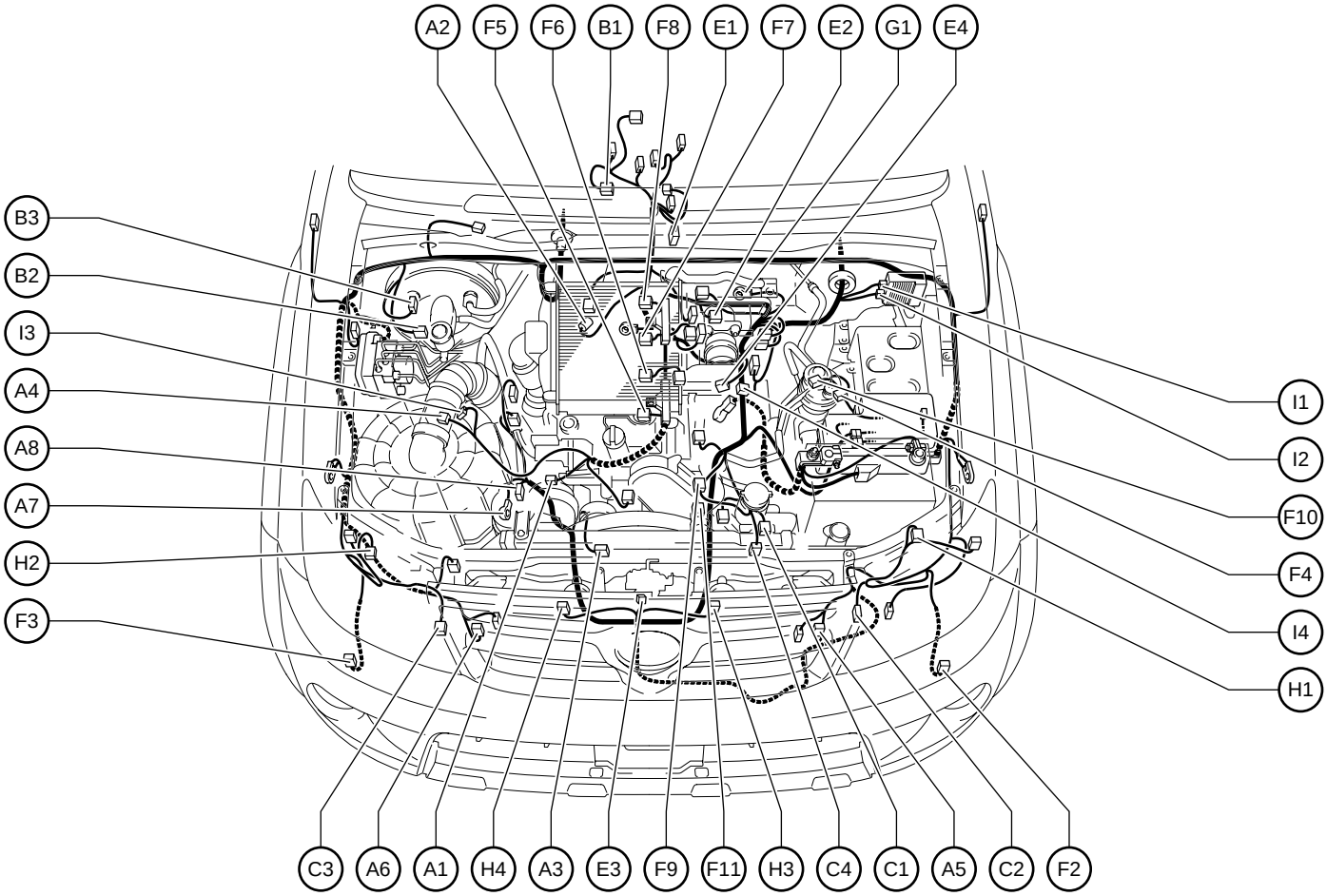

A 1 A/C Compressor
A 2 A/T Fluid Temp. Sensor
A 3 ADD Actuator
A 4 Air Flow Meter
A 5 Airbag Sensor (Front LH)
A 6 Airbag Sensor (Front RH)
A 7 Alternator
A 8 Alternator

B 1 Back–Up Lamp SW
B 2 Brake Fluid Level Warning SW
B 3 Brake Vacuum Warning SW

C 1 Camshaft Position Sensor
C 2 Clearance Lamp (Front LH)
C 3 Clearance Lamp (Front RH)
C 4 Crankshaft Position Sensor

E 1 ECT Solenoid
E 2 EGR Valve Position Sensor
E 3 Engine Hood Courtesy SW
E 4 Engine Oil Pressure Sensor

F 2 Fog Lamp (Front LH)
F 3 Fog Lamp (Front RH)
F 4 Fuel Filter Warning SW
F 5 Fuel Injector (No.1)
F 6 Fuel Injector (No.2)
F 7 Fuel Injector (No.3)
F 8 Fuel Injector (No.4)
F 9 Fuel Pressure Sensor
F 10 Fuel Sedimenter Level Warning SW
F 11 Fuel Temp. Sensor

G 1 Glow Plug

H 1 Headlamp (LH)
H 2 Headlamp (RH)
H 3 Horn (High)
H 4 Horn (Low)

I 1 Injector Driver (EDU)
I 2 Injector Driver (EDU)
I 3 Inlet Air Temp. Sensor (Air Cleaner)
I 4 Inlet Air Temp. Sensor (Inter Cooler)

cardiagn.com

Position of Parts in Engine Compartment

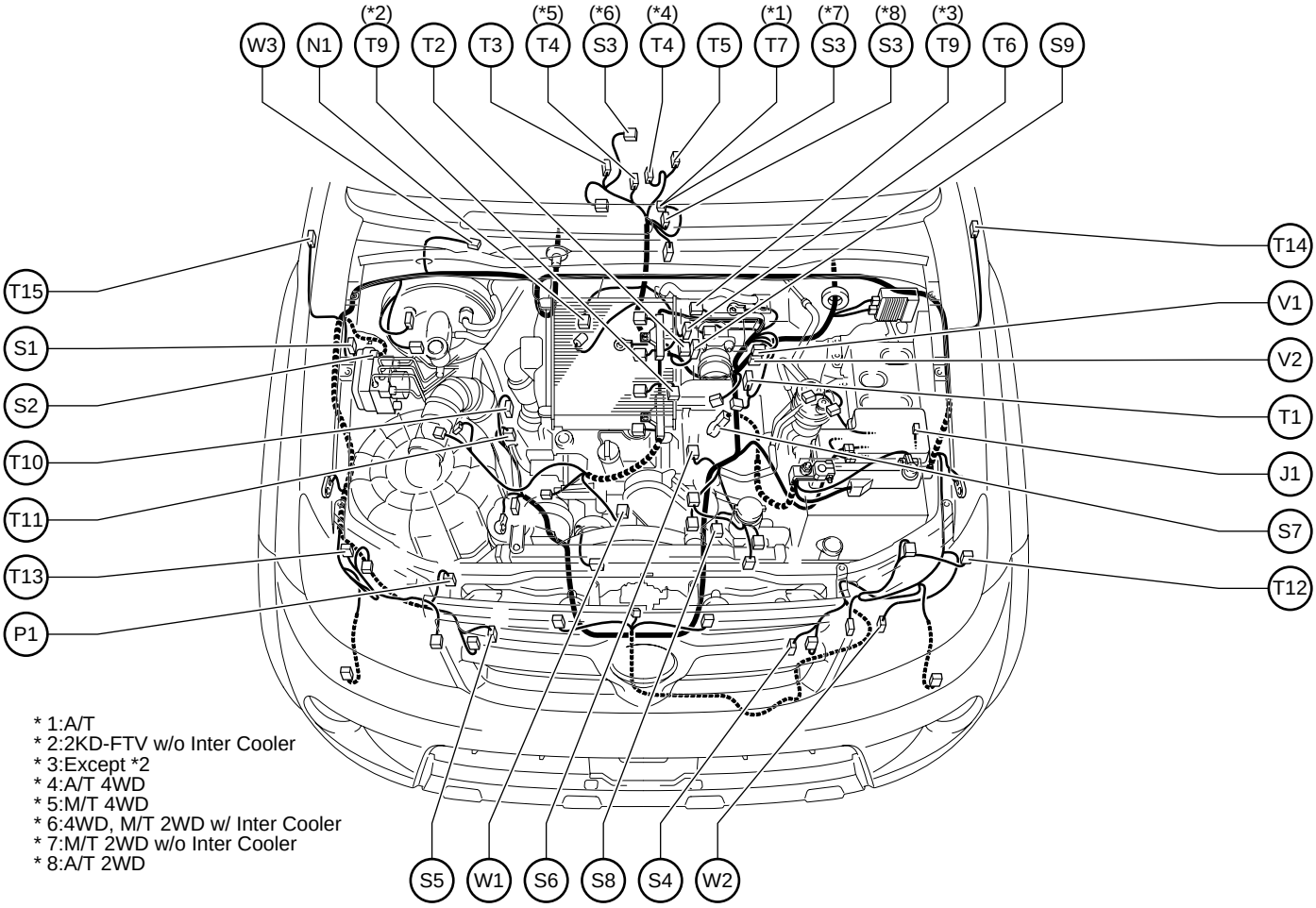

J 1 Junction Connector

N 1 Neutral Start SW

P 1 Pressure SW

S 1 Security Horn
S 2 Skid Control ECU with Actuator
S 3 Speed Sensor
S 4 Speed Sensor (Front LH)
S 5 Speed Sensor (Front RH)
S 6 Starter
S 7 Starter
S 8 Suction Control Valve
S 9 Swirl Control Valve

T 1 Throttle Body Assembly
T 2 Throttle Body Assembly
T 3 Transfer Indicator SW (4WD Position)
T 4 Transfer Indicator SW (L4 Position)
T 5 Transfer Indicator SW (Neutral Position)
T 6 Transmission Revolution Sensor (Input)
T 7 Transmission Revolution Sensor (Output)
T 9 Turbo Pressure Sensor
T 10 Turbocharger Variable Nozzle Motor
T 11 Turbocharger Variable Nozzle Sensor
T 12 Turn Signal Lamp (Front LH)
T 13 Turn Signal Lamp (Front RH)
T 14 Turn Signal Lamp (Front Side LH)
T 15 Turn Signal Lamp (Front Side RH)

V 1 VRV (EGR)
V 2 VSV (EGR Cut Valve)

W 1 Water Temp. Sensor
W 2 Windshield Washer Motor
W 3 Windshield Wiper Motor

cardiagn.com

Position of Parts in Instrument Panel

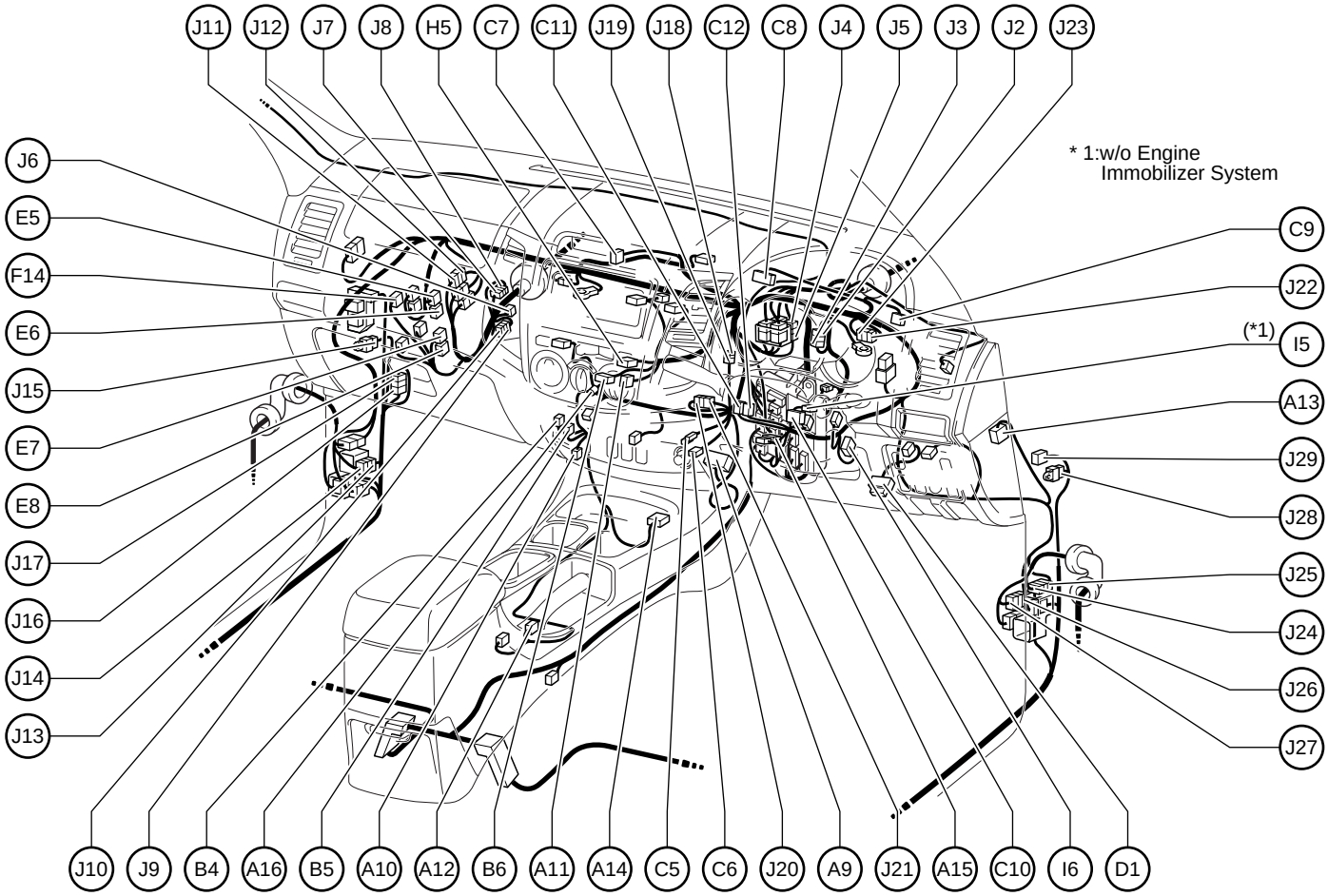

A 9 A/C Amplifier
A 10 A/C Thermistor
A 11 A/C Volume SW
A 12 A/T Shift Lever Illumination
A 13 Accelerator Position Sensor
A 14 Airbag Sensor Assembly Center
A 15 Airbag Squib (Steering Wheel Pad)
A 16 Ashtray Illumination

B 4 Blower Motor
B 5 Blower Resistor
B 6 Blower SW

C 5 Cigarette Lighter
C 6 Cigarette Lighter Illumination
C 7 Clock
C 8 Combination Meter
C 9 Combination Meter
C 10 Combination SW
C 11 Combination SW
C 12 Combination SW

D 1 DLC3

E 5 Engine ECU
E 6 Engine ECU
E 7 Engine ECU
E 8 Engine ECU

F 14 4WD Control ECU

H 5 Hazard Warning Signal SW

I 5 Ignition Key Cylinder Lamp
I 6 Ignition SW

J 2 Junction Connector
J 3 Junction Connector
J 4 Junction Connector
J 5 Junction Connector
J 6 Junction Connector
J 7 Junction Connector
J 8 Junction Connector
J 9 Junction Connector
J 10 Junction Connector
J 11 Junction Connector
J 12 Junction Connector
J 13 Junction Connector
J 14 Junction Connector
J 15 Junction Connector
J 16 Junction Connector
J 17 Junction Connector
J 18 Junction Connector
J 19 Junction Connector
J 20 Junction Connector
J 21 Junction Connector
J 22 Junction Connector
J 23 Junction Connector
J 24 Junction Connector
J 25 Junction Connector
J 26 Junction Connector
J 27 Junction Connector
J 28 Junction Connector
J 29 Junction Connector

cardiagn.com

Position of Parts in Instrument Panel

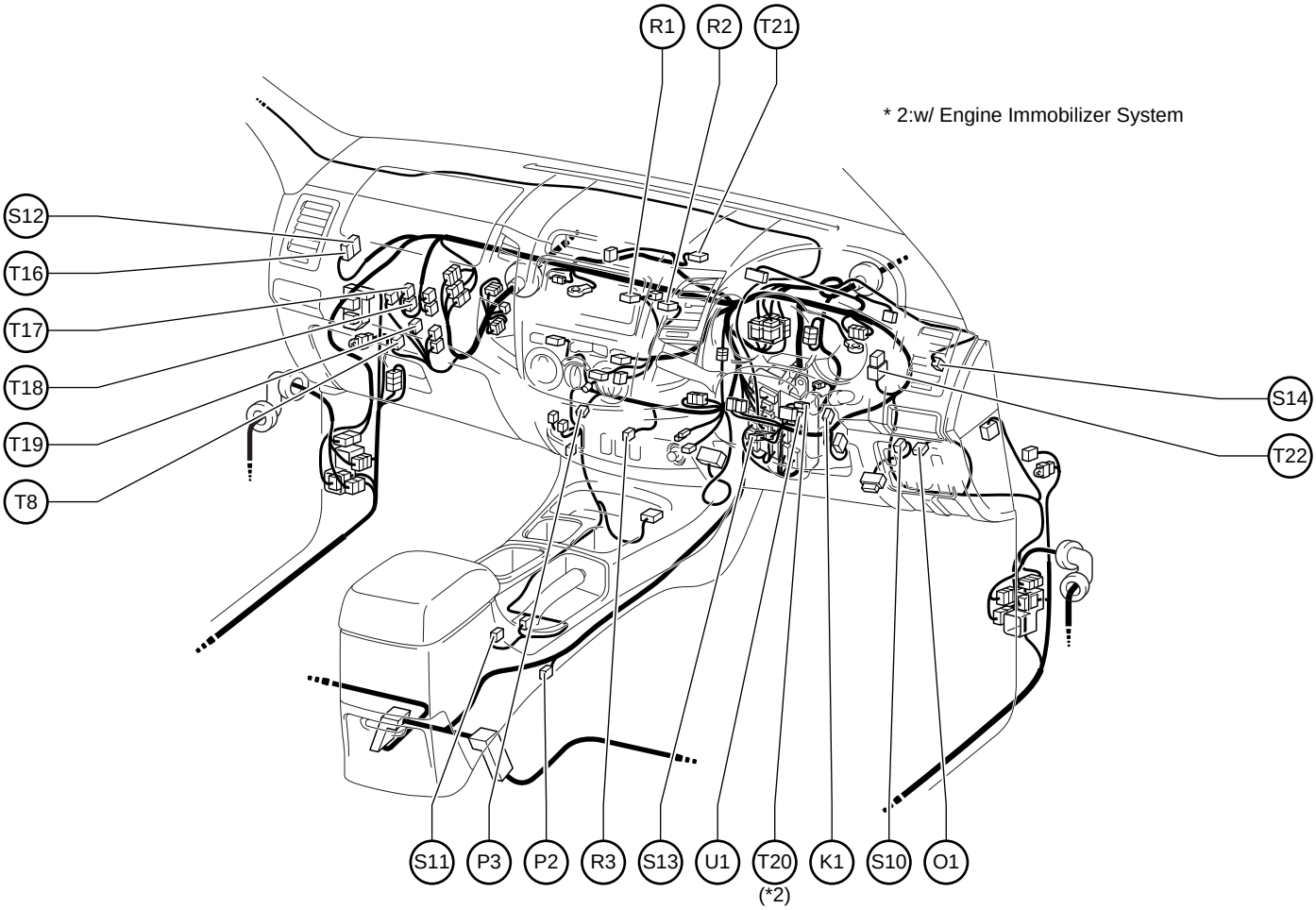

K 1 Key Interlock Solenoid

O 1 Outer Mirror SW

P 2 Parking Brake SW
P 3 Power Point Socket

R 1 Radio Receiver Assembly
R 2 Radio Receiver Assembly
R 3 Rear Window Defogger SW

S 10 Security Indicator Lamp
S 11 Shift Lock Control ECU
S 12 Short Pin (Theft Warning ECU)
S 13 Spiral Cable
S 14 Stop Lamp SW

T 8 Turbo Motor Driver
T 16 Theft Warning ECU
T 17 Transmission Control ECU
T 18 Transmission Control ECU
T 19 Transmission Control ECU
T 20 Transponder Key Amplifier
T 21 Transponder Key ECU
T 22 Turn Signal Flasher

U 1 Unlock Warning SW

cardiagn.com

Position of Parts in Body

[Double Cab]

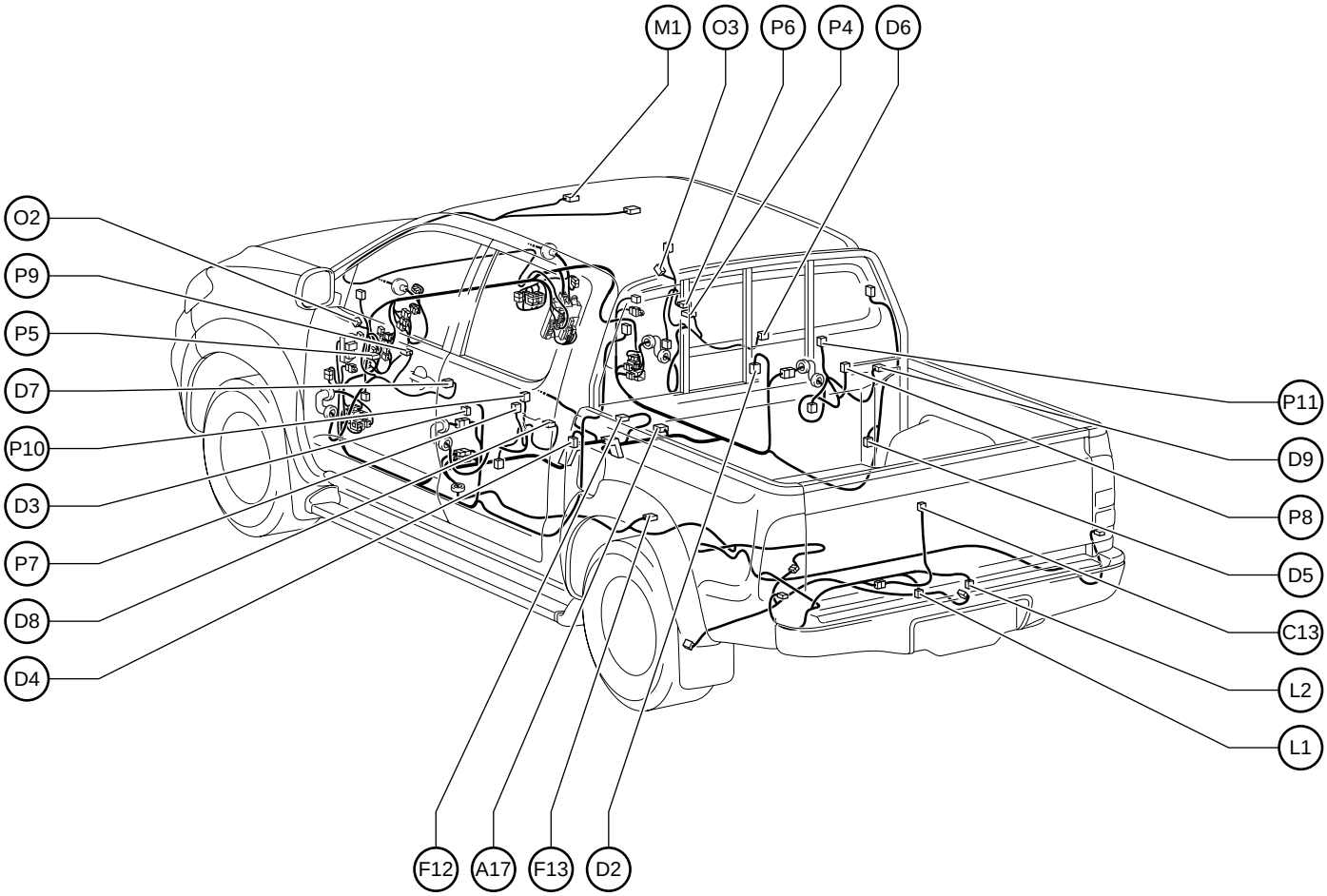

A 17 ABS Deceleration Sensor

C 13 Center Stop Lamp

D 2 Door Courtesy SW (Driver's Side)
D 3 Door Courtesy SW (Front Passenger's Side)
D 4 Door Courtesy SW (Rear LH)
D 5 Door Courtesy SW (Rear RH)
D 6 Door Lock Assembly (Driver's Side)
D 7 Door Lock Assembly (Front Passenger's Side)
D 8 Door Lock Assembly (Rear LH)
D 9 Door Lock Assembly (Rear RH)

F 12 Front Seat Inner Belt (Driver's Side)
F 13 Fuel Sender Gage

L 1 License Plate Lamp LH
L 2 License Plate Lamp RH

M 1 Map Lamp

O 2 Outer Rear View Mirror (LH)
O 3 Outer Rear View Mirror (RH)

P 4 Power Window Master SW
P 5 Power Window Regulator Motor (Front LH)
P 6 Power Window Regulator Motor (Front RH)
P 7 Power Window Regulator Motor (Rear LH)
P 8 Power Window Regulator Motor (Rear RH)
P 9 Power Window SW (Front Passenger's Side)
P 10 Power Window SW (Rear LH)
P 11 Power Window SW (Rear RH)

cardiagn.com

Position of Parts in Body

[Double Cab]

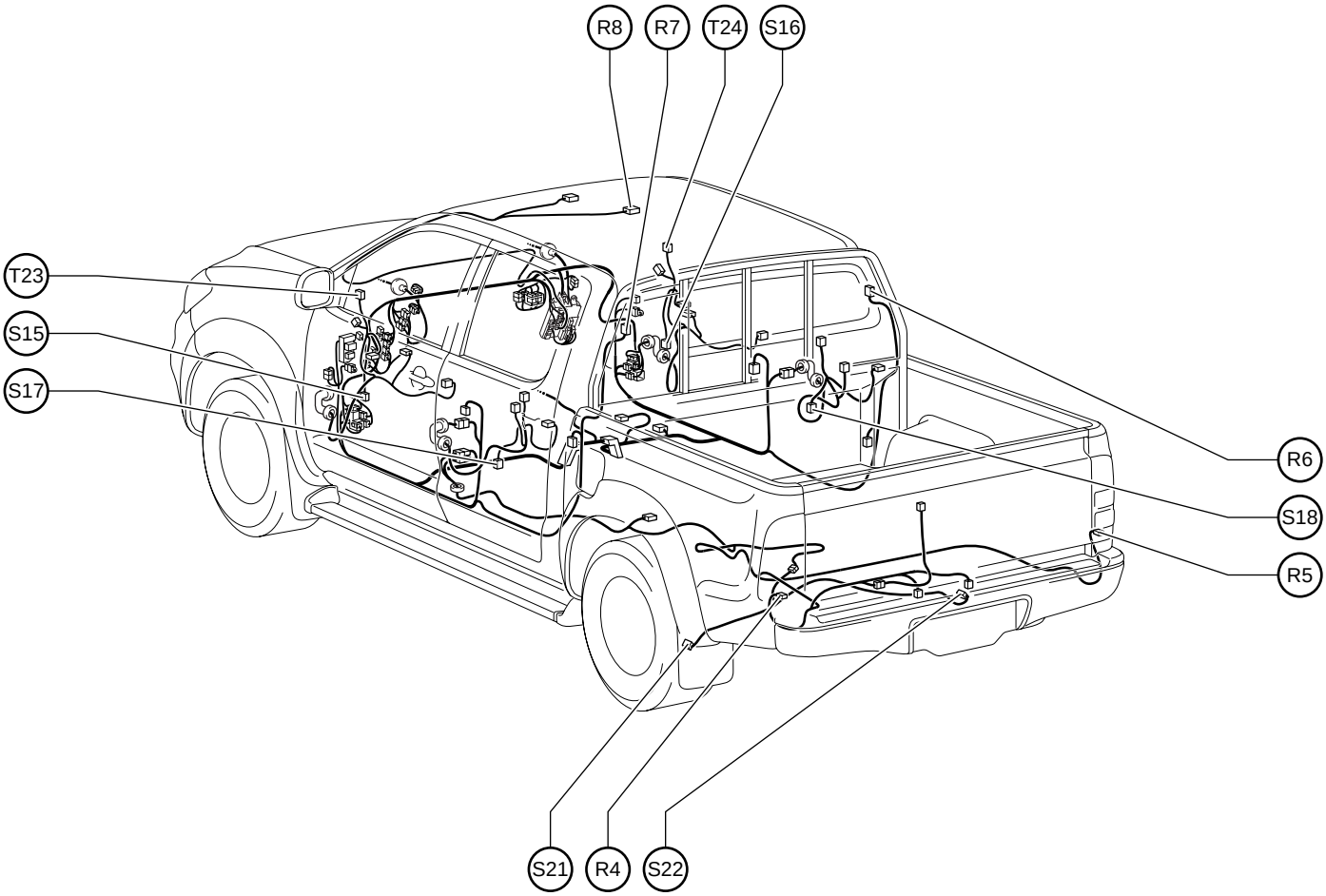

R 4 Rear Combination Lamp (LH)
R 5 Rear Combination Lamp (RH)
R 6 Rear Window Defogger
R 7 Rear Window Defogger
R 8 Room Lamp

S 15 Speaker (Front Door LH)
S 16 Speaker (Front Door RH)
S 17 Speaker (Rear Door LH)
S 18 Speaker (Rear Door RH)
S 21 Speed Sensor (Rear LH)
S 22 Speed Sensor (Rear RH)

T 23 Tweeter (LH)
T 24 Tweeter (RH)

cardiagn.com

Position of Parts in Body

[Extra Cab]

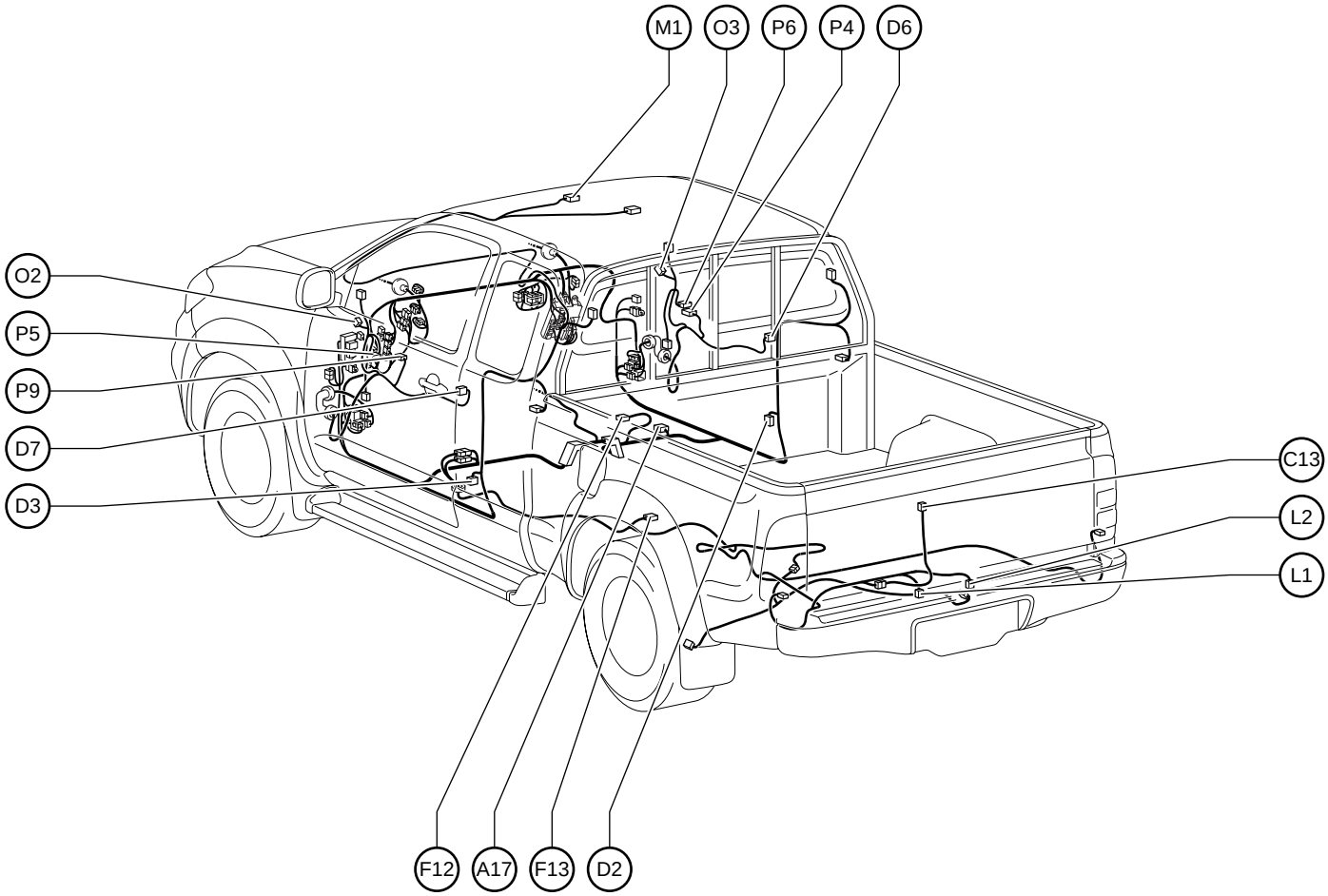

A 17 ABS Deceleration Sensor

C 13 Center Stop Lamp

D 2 Door Courtesy SW (Driver's Side)
D 3 Door Courtesy SW (Front Passenger's Side)
D 6 Door Lock Assembly (Driver's Side)
D 7 Door Lock Assembly (Front Passenger's Side)

F 12 Front Seat Inner Belt (Driver's Side)
F 13 Fuel Sender Gage

L 1 License Plate Lamp LH
L 2 License Plate Lamp RH

M 1 Map Lamp

O 2 Outer Rear View Mirror (LH)
O 3 Outer Rear View Mirror (RH)

P 4 Power Window Master SW
P 5 Power Window Regulator Motor (Front LH)
P 6 Power Window Regulator Motor (Front RH)
P 9 Power Window SW (Front Passenger's Side)

cardiagn.com

Position of Parts in Body

[Extra Cab]

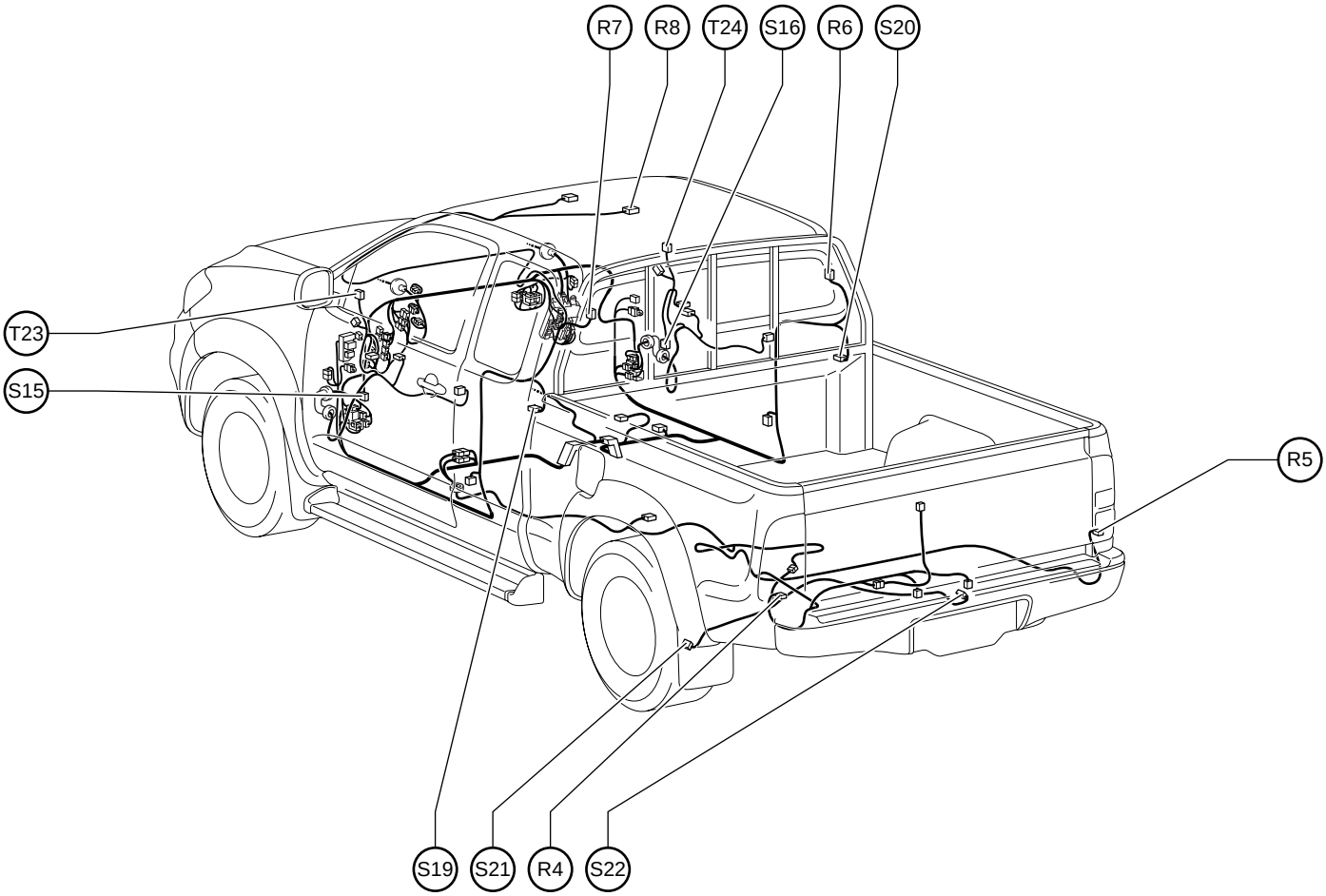

R 4 Rear Combination Lamp (LH)
R 5 Rear Combination Lamp (RH)
R 6 Rear Window Defogger
R 7 Rear Window Defogger
R 8 Room Lamp

S 15 Speaker (Front Door LH)
S 16 Speaker (Front Door RH)
S 19 Speaker (Rear LH)
S 20 Speaker (Rear RH)
S 21 Speed Sensor (Rear LH)
S 22 Speed Sensor (Rear RH)

T 23 Tweeter (LH)
T 24 Tweeter (RH)

cardiagn.com

Position of Parts in Body

[Single Cab]

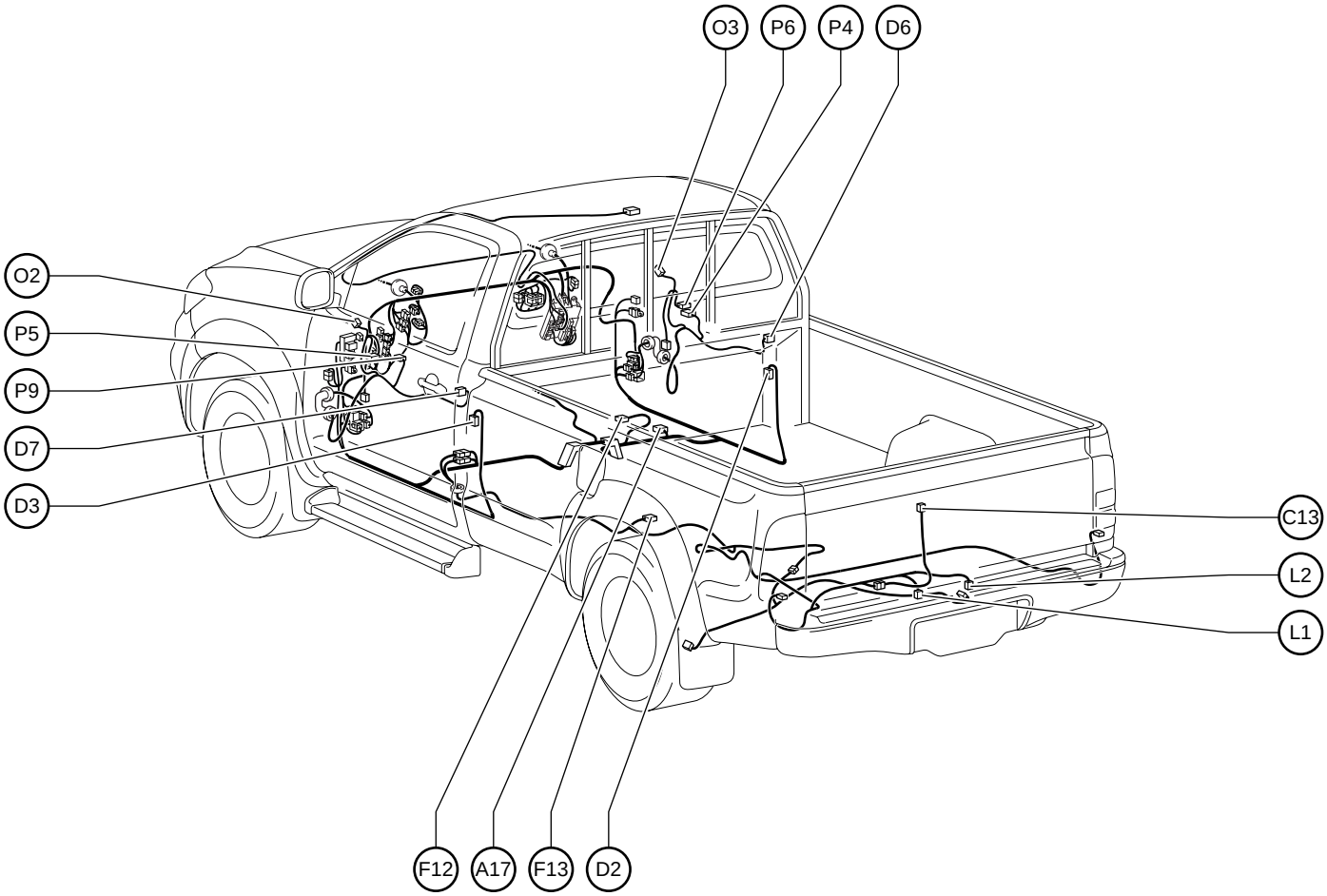

A 17 ABS Deceleration Sensor

C 13 Center Stop Lamp

D 2 Door Courtesy SW (Driver's Side)
D 3 Door Courtesy SW (Front Passenger's Side)
D 6 Door Lock Assembly (Driver's Side)
D 7 Door Lock Assembly (Front Passenger's Side)

F 12 Front Seat Inner Belt (Driver's Side)
F 13 Fuel Sender Gage

L 1 License Plate Lamp LH
L 2 License Plate Lamp RH

O 2 Outer Rear View Mirror (LH)
O 3 Outer Rear View Mirror (RH)

P 4 Power Window Master SW
P 5 Power Window Regulator Motor (Front LH)
P 6 Power Window Regulator Motor (Front RH)
P 9 Power Window SW (Front Passenger's Side)

cardiagn.com

Position of Parts in Body

[Single Cab]

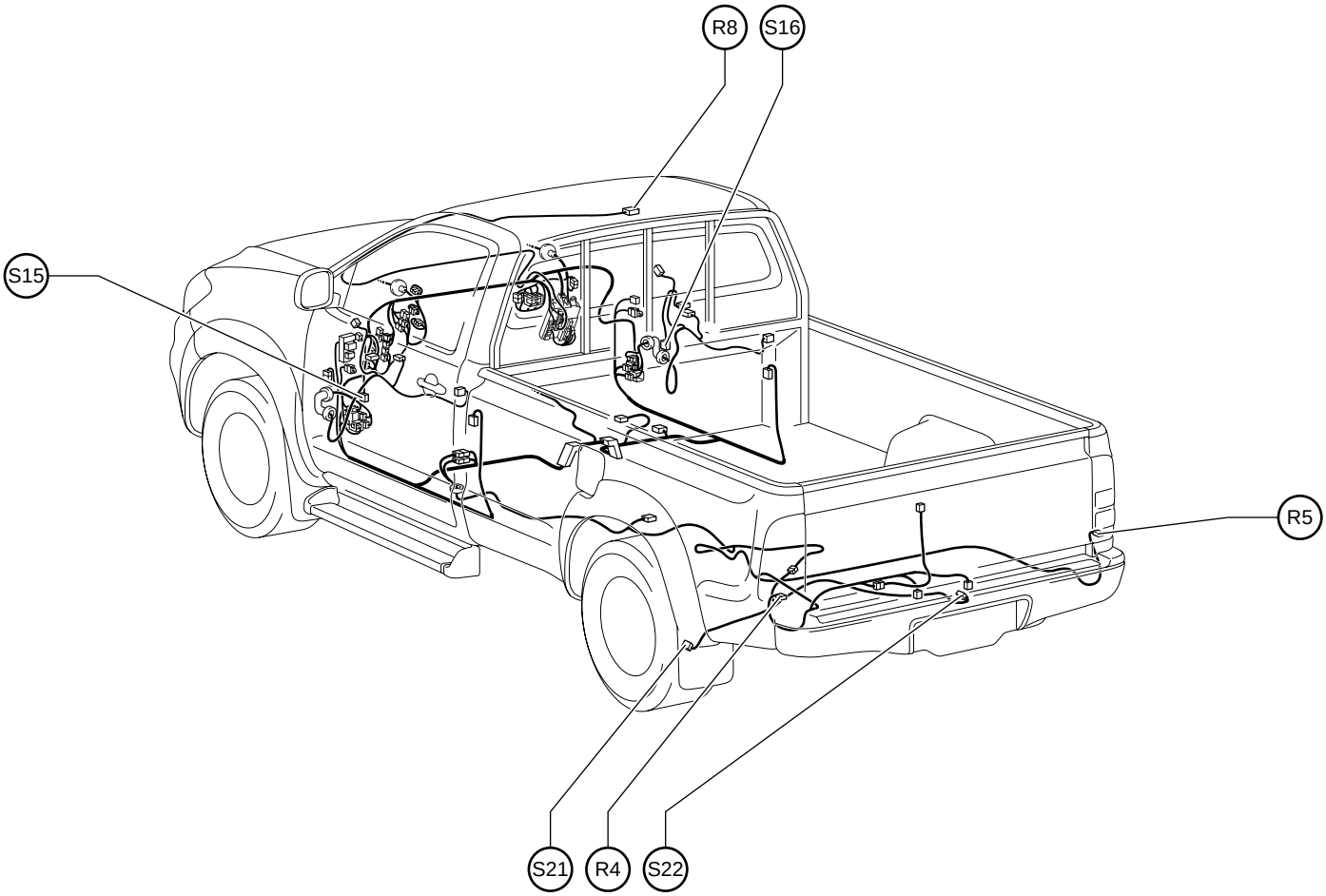

R 4 Rear Combination Lamp (LH)
R 5 Rear Combination Lamp (RH)
R 8 Room Lamp

S 15 Speaker (Front Door LH)
S 16 Speaker (Front Door RH)
S 21 Speed Sensor (Rear LH)
S 22 Speed Sensor (Rear RH)

cardiagn.com

▭ : Location of Connector Joining Wire Harness and Wire Harness

▽ : Location of Ground Points

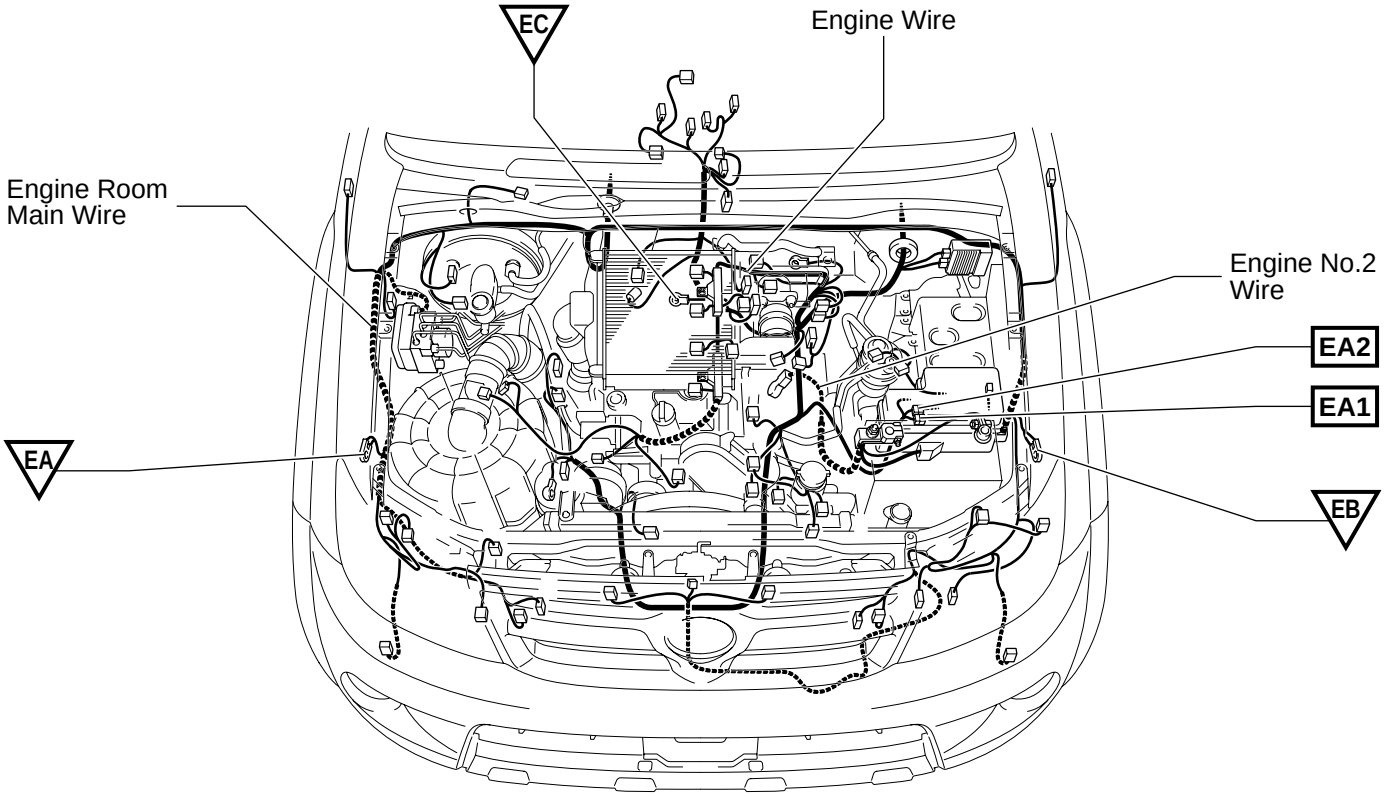

⬡ : Location of Splice Points

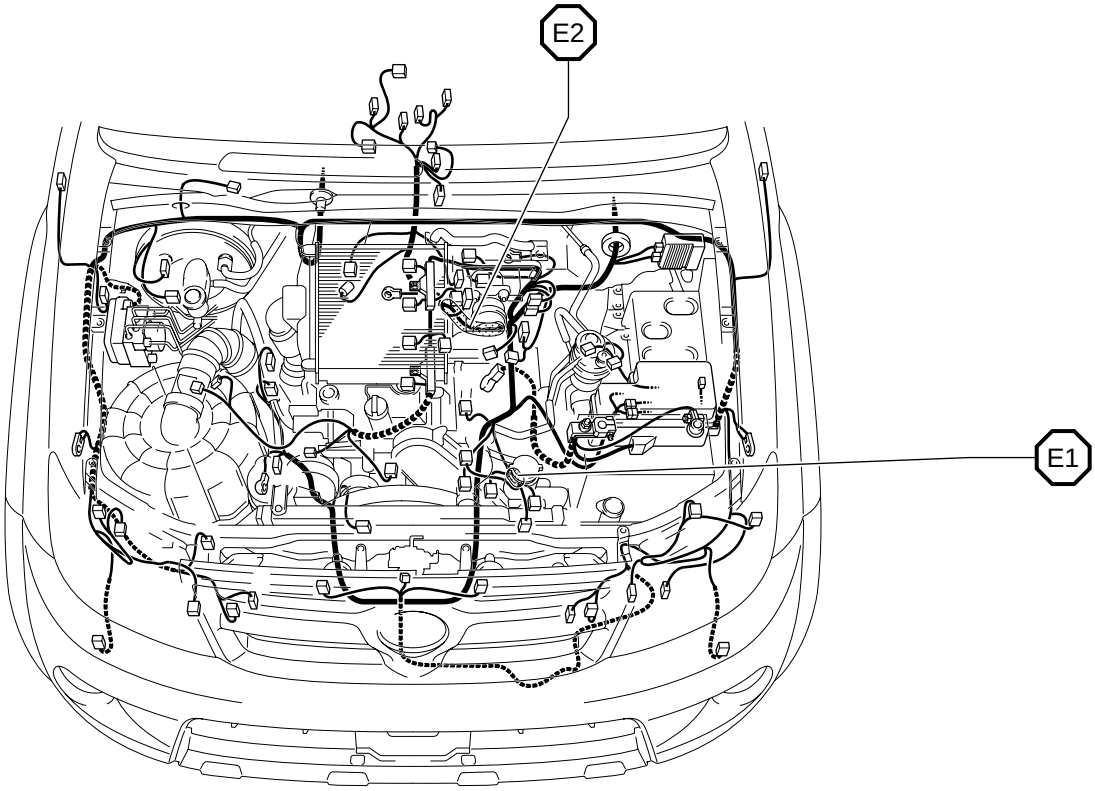

cardiagn.com

Connector Joining Wire Harness and Wire Harness

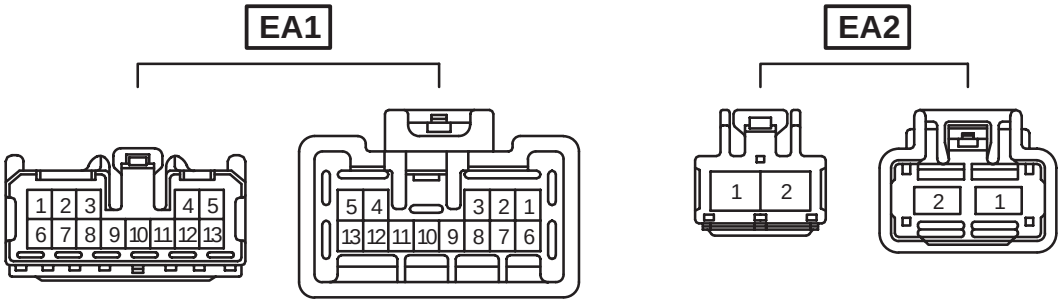

Code	Joining Wire Harness and Wire Harness (Connector Location)
EA1	Engine Wire and Engine Room Main Wire (Inside of Engine Room R/B and J/B)
EA2	

cardiagn.com

▭ : Location of Connector Joining Wire Harness and Wire Harness

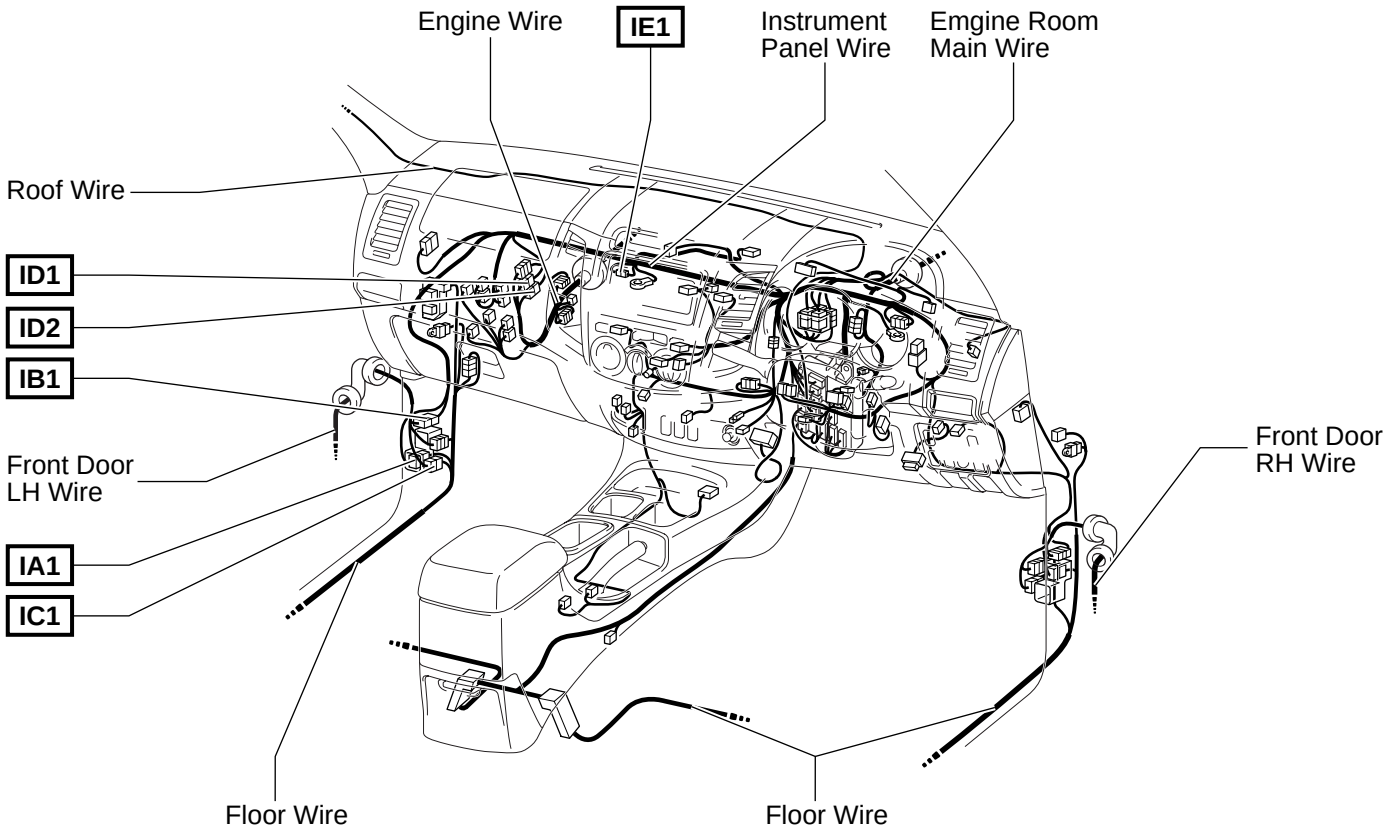

▽ : Location of Ground Points

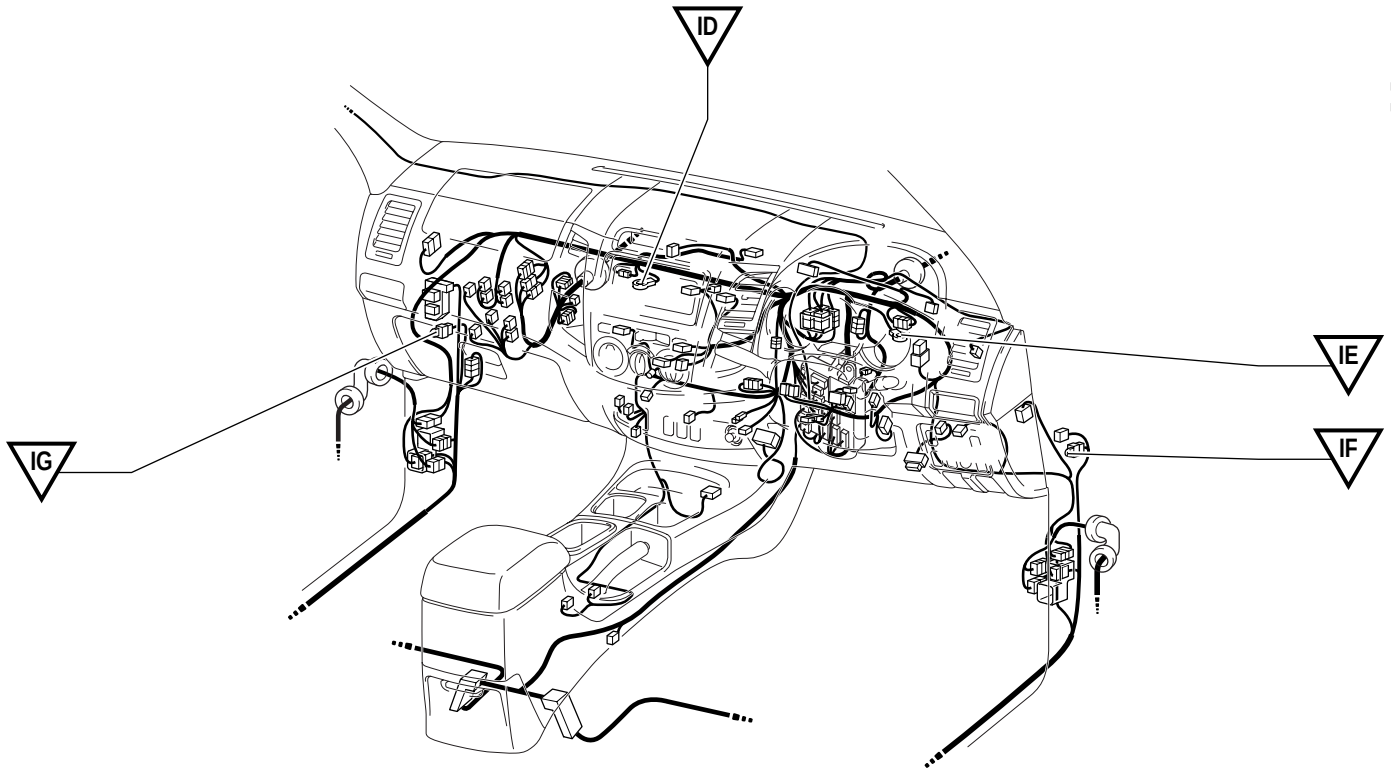

cardiagn.com

Connector Joining Wire Harness and Wire Harness

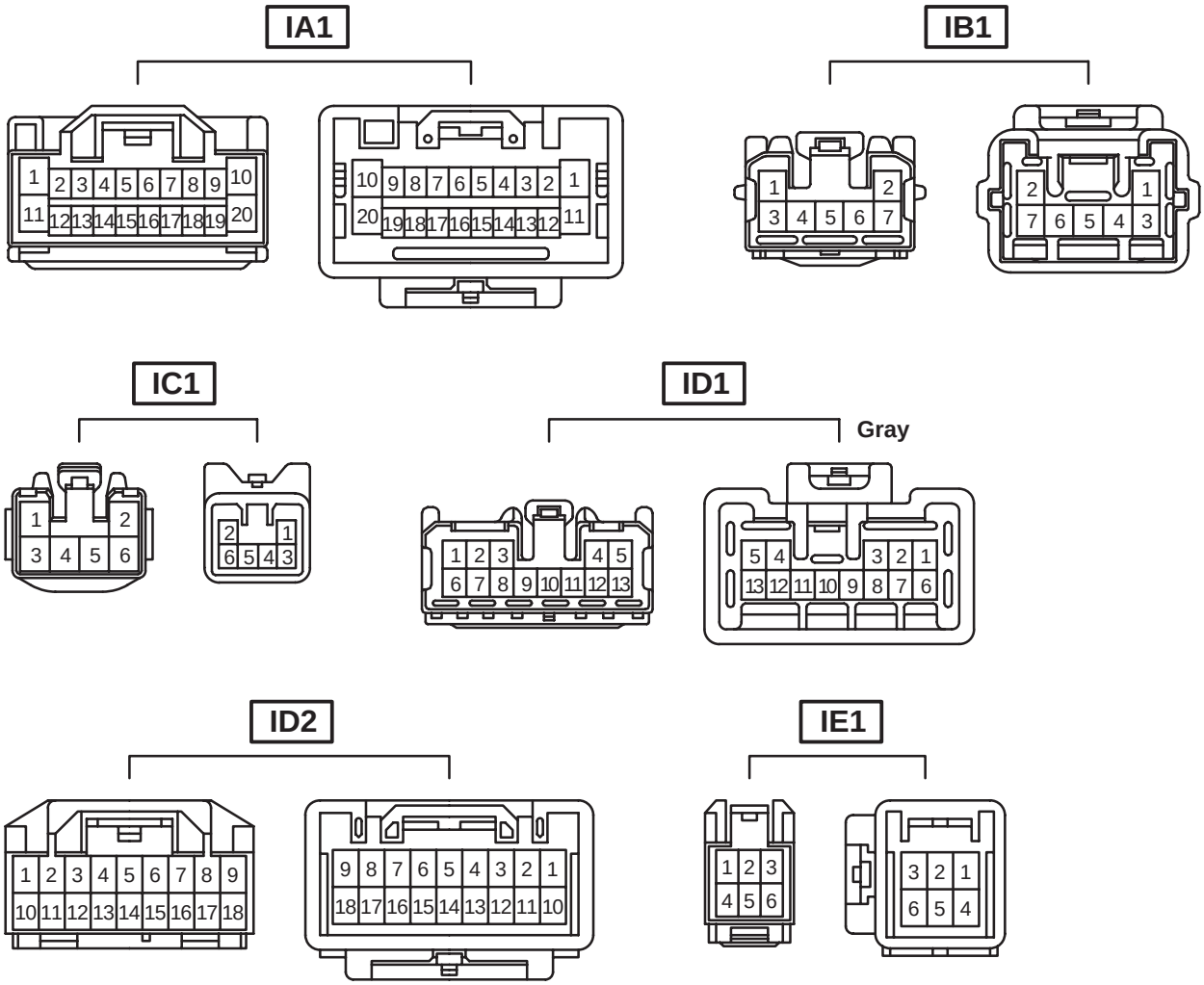

Code	Joining Wire Harness and Wire Harness (Connector Location)
IA1	Instrument Panel Wire and Floor Wire (Left Kick Panel)
IB1	Front Door LH Wire and Instrument Panel Wire (Left Kick Panel)
IC1	Front Door LH Wire and Floor Wire (Left Kick Panel)
ID1	Engine Wire and Instrument Panel Wire (Behind the Glove Box)
ID2	
IE1	Instrument Panel Wire and Instrument Panel Wire (Instrument Panel Reinforcement LH)

cardiagn.com

▭ : Location of Connector Joining Wire Harness and Wire Harness

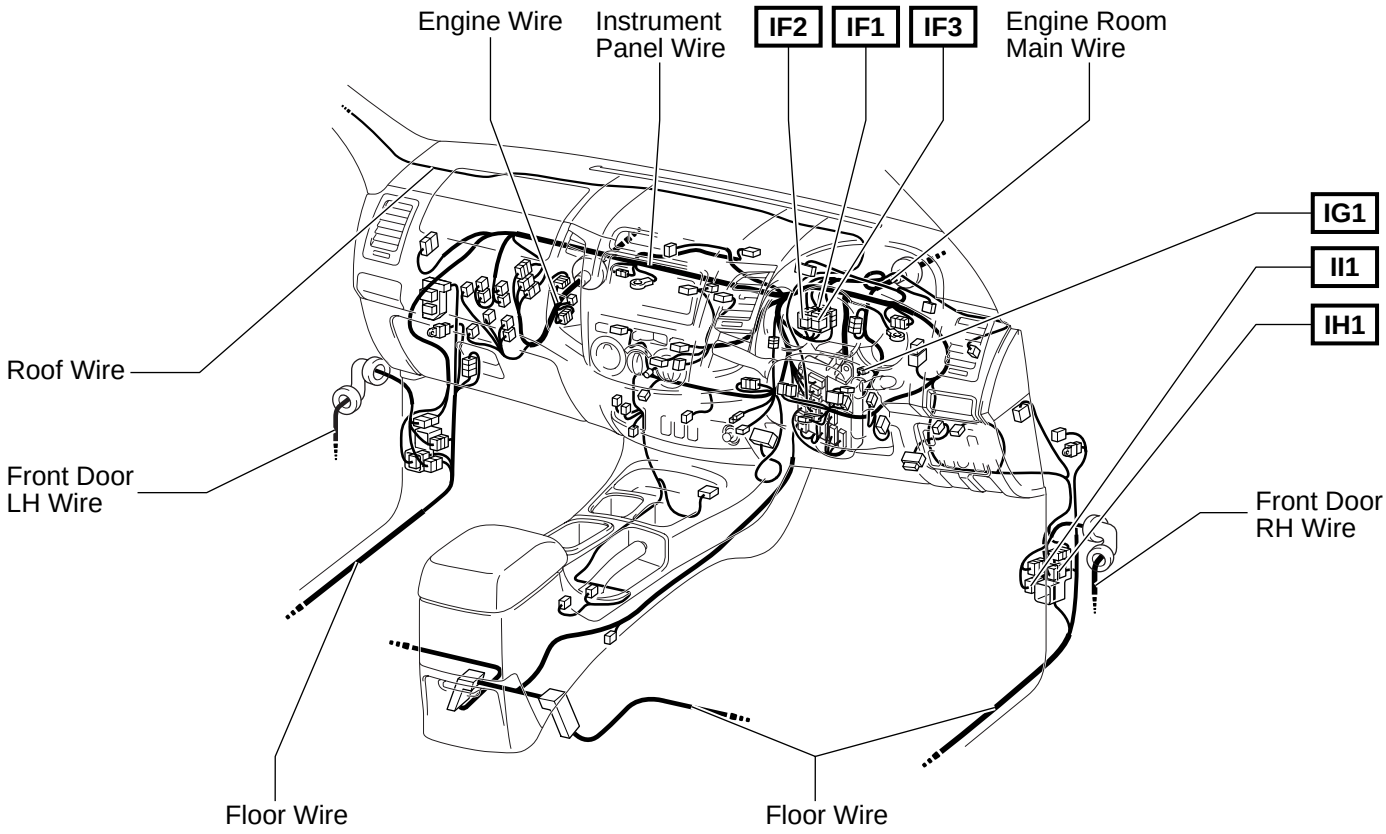

⬡ : Location of Splice Points

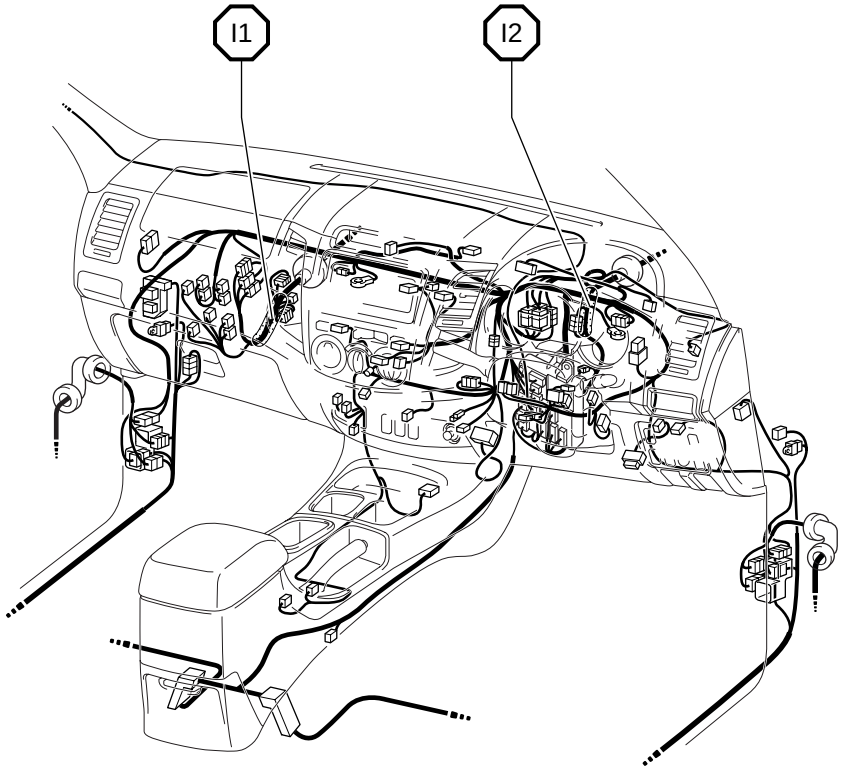

cardiagn.com

Connector Joining Wire Harness and Wire Harness

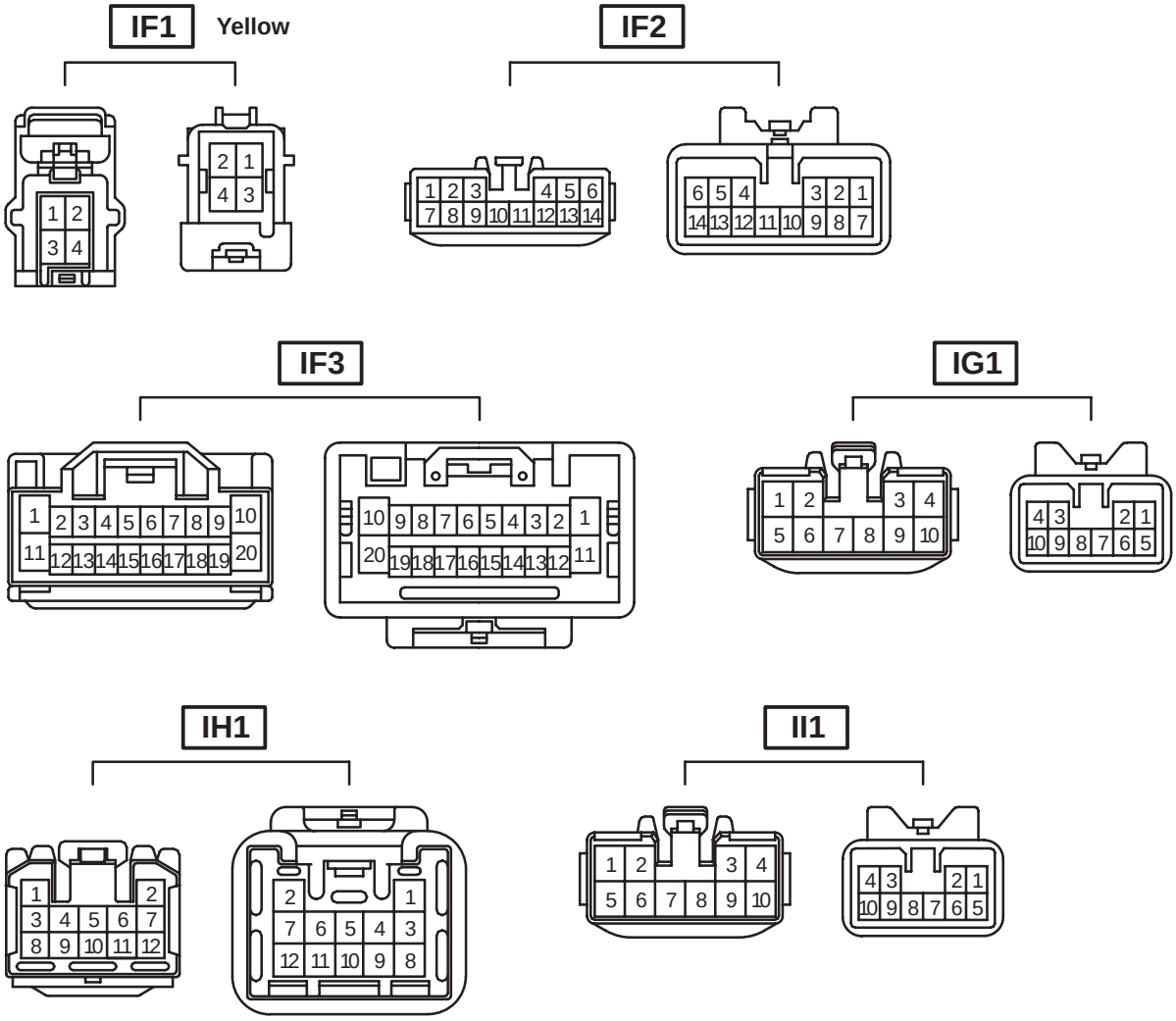

Code	Joining Wire Harness and Wire Harness (Connector Location)
IF1	Engine Room Main Wire and Instrument Panel Wire (Behind the Driver Side J/B)
IF2	
IF3	
IG1	Engine Room Main Wire and Floor Wire (Near the Driver Side J/B)
IH1	Instrument Panel Wire and Floor Wire (Right Kick Panel)
II1	Front Door RH Wire and Floor Wire (Right Kick Panel)

cardiagn.com

▭ : Location of Connector Joining Wire Harness and Wire Harness

[Double Cab]

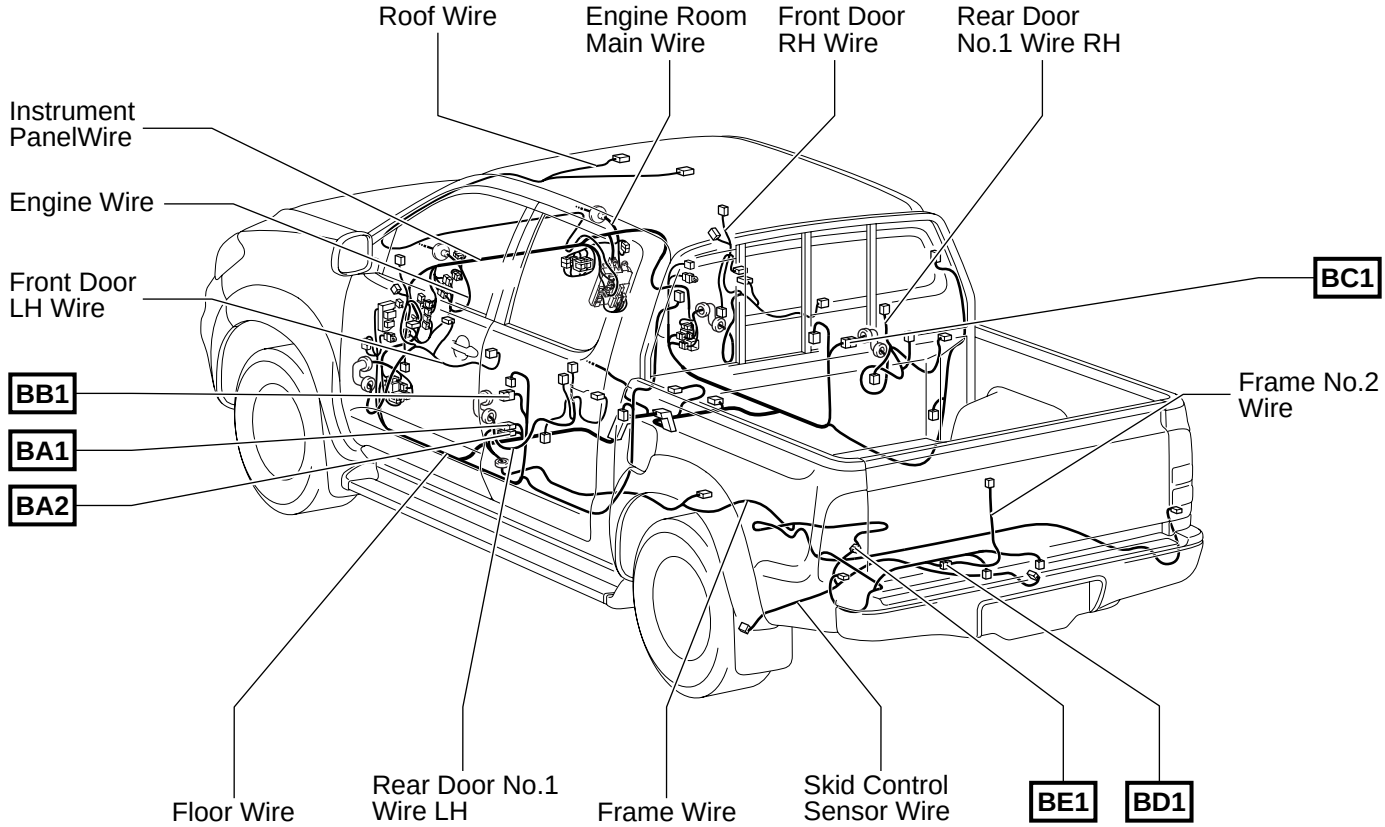

⬡ : Location of Splice Points

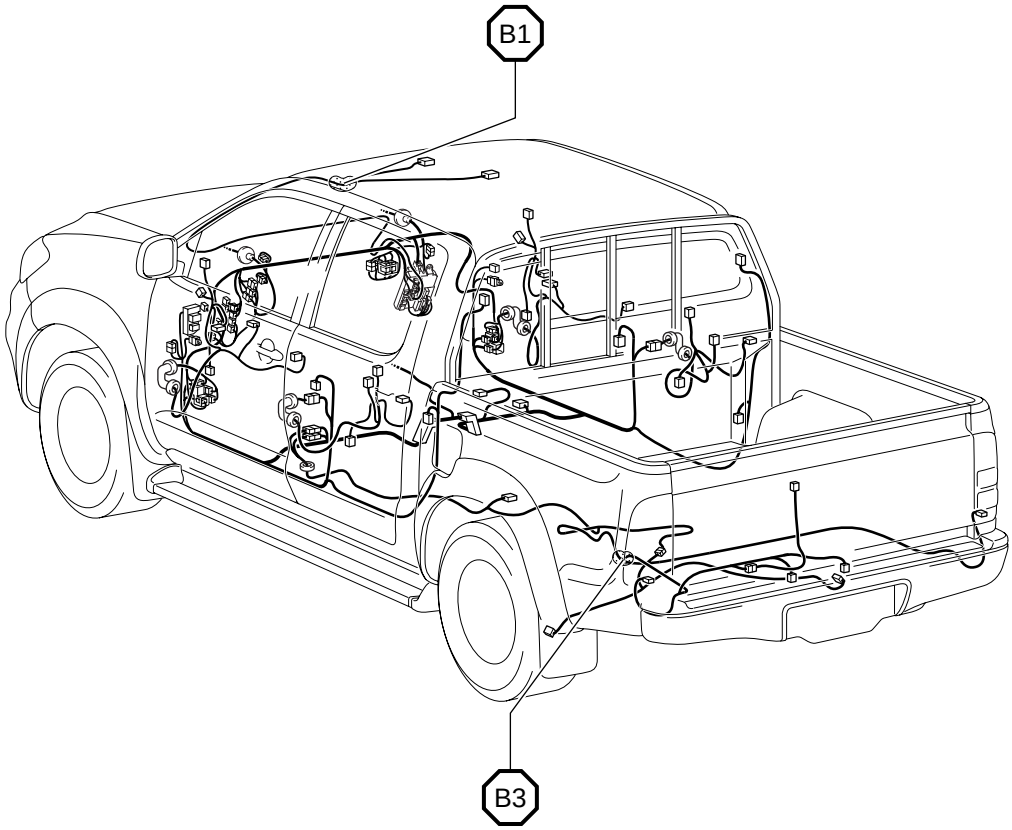

cardiagn.com

Connector Joining Wire Harness and Wire Harness

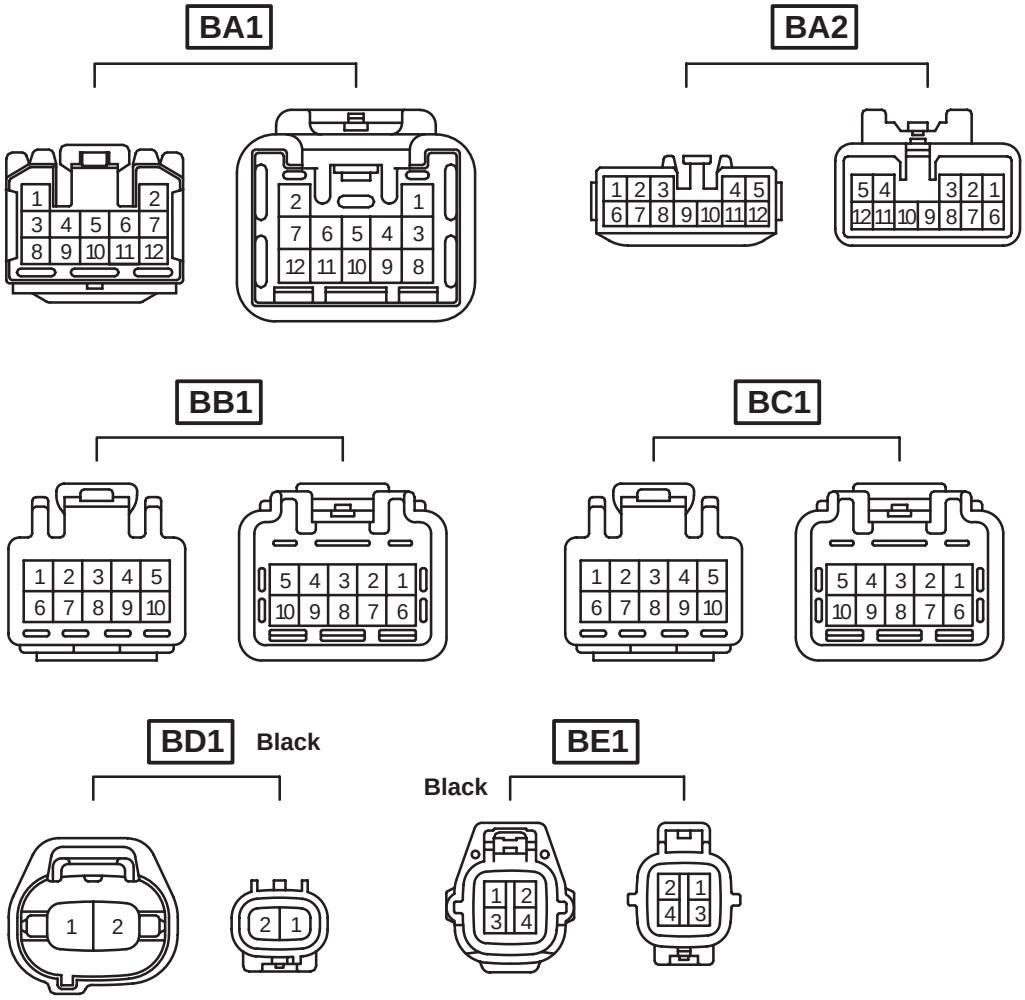

Code	Joining Wire Harness and Wire Harness (Connector Location)
BA1	Frame Wire and Floor Wire (Under the Front Seat LH)
BA2	
BB1	Rear Door No.1 Wire LH and Floor Wire (Center Pillar LH)
BC1	Rear Door No.1 Wire RH and Floor Wire (Center Pillar RH)
BD1	Frame No.2 Wire and Frame Wire (Under the Back Panel LH)
BE1	Frame Wire and Skid Control Sensor Wire (Rear of the Rear Differential)

cardiagn.com

▭ : Location of Connector Joining Wire Harness and Wire Harness

[Extra Cab]

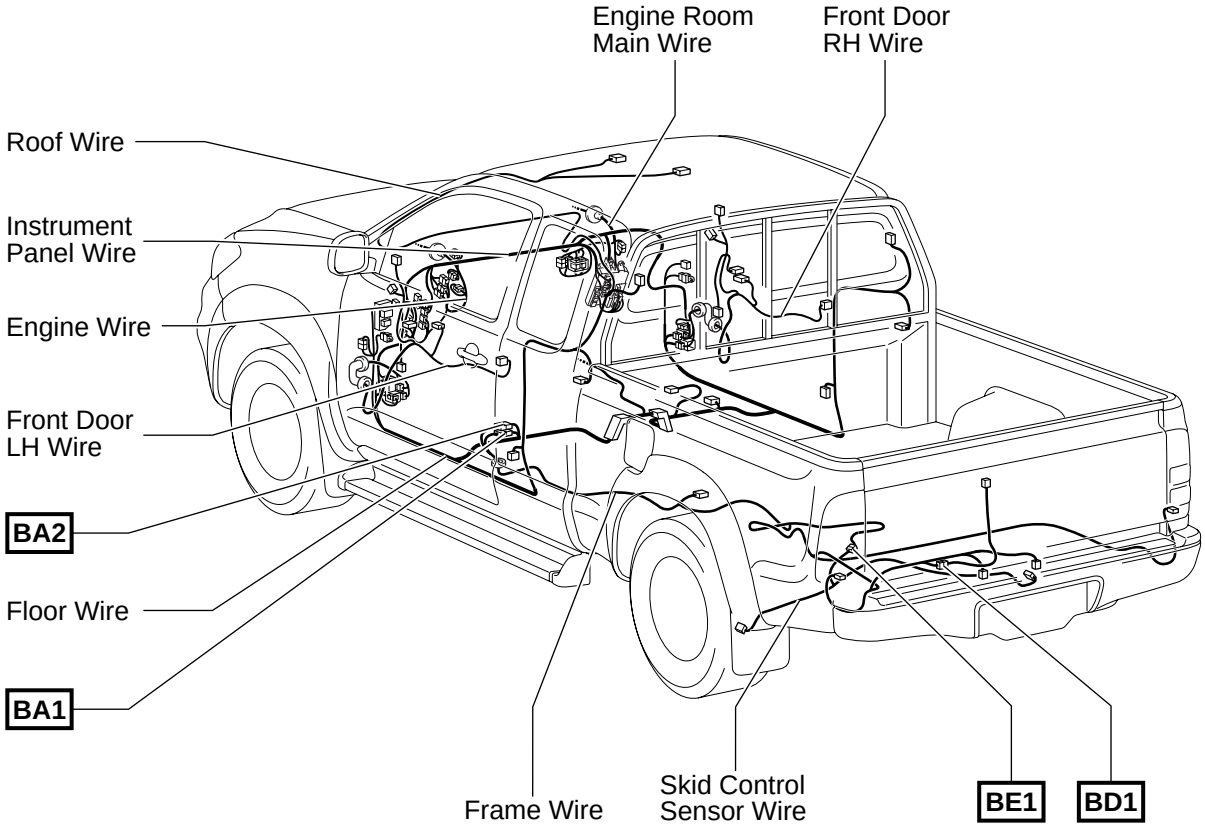

⬡ : Location of Splice Points

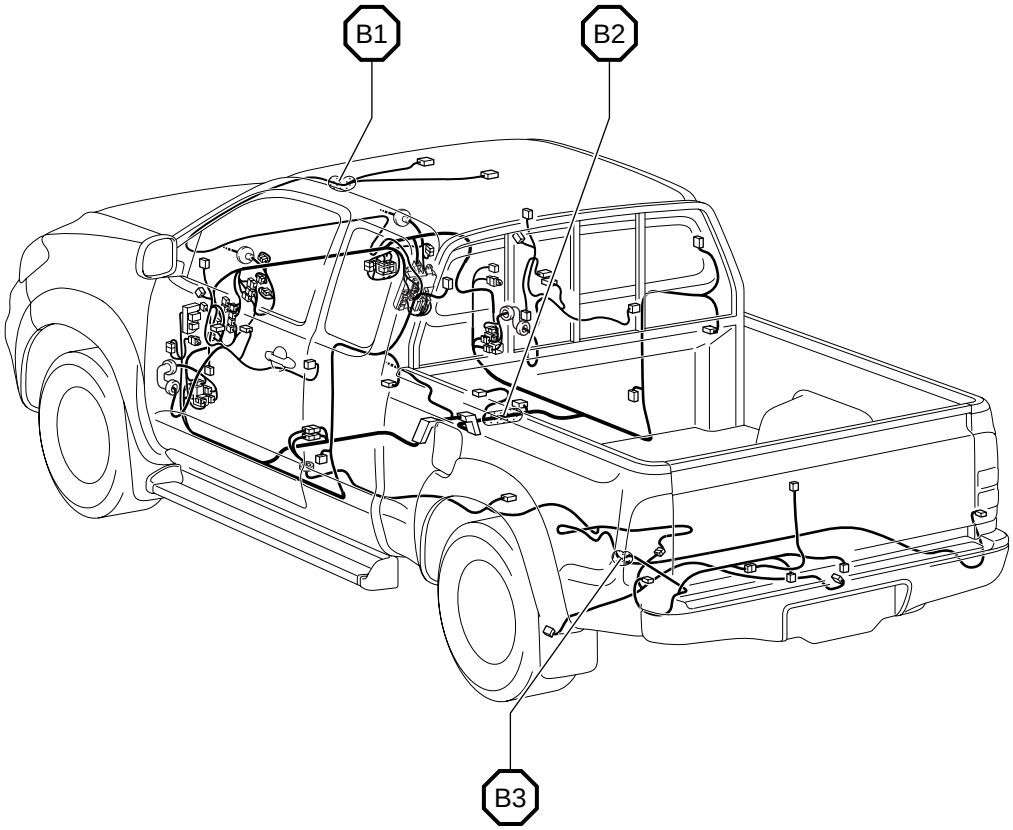

cardiagn.com

Connector Joining Wire Harness and Wire Harness

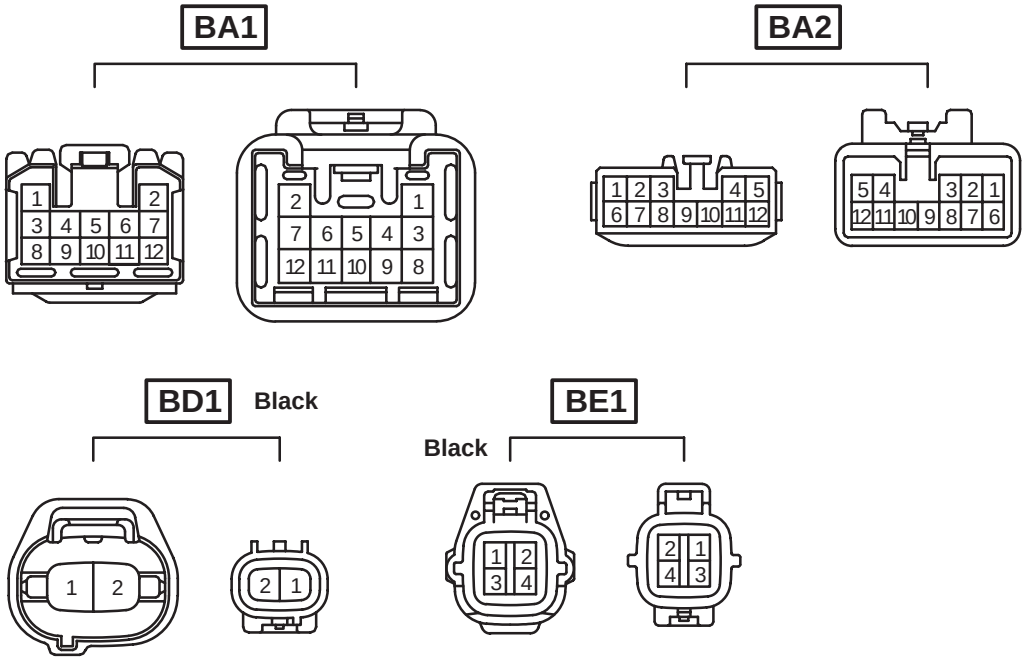

Code	Joining Wire Harness and Wire Harness (Connector Location)
BA1	Frame Wire and Floor Wire (Under the Front Seat LH)
BA2	
BD1	Frame No.2 Wire and Frame Wire (Under the Back Panel LH)
BE1	Frame Wire and Skid Control Sensor Wire (Rear of the Rear Differential)

cardiagn.com

▭ : Location of Connector Joining Wire Harness and Wire Harness

[Single Cab]

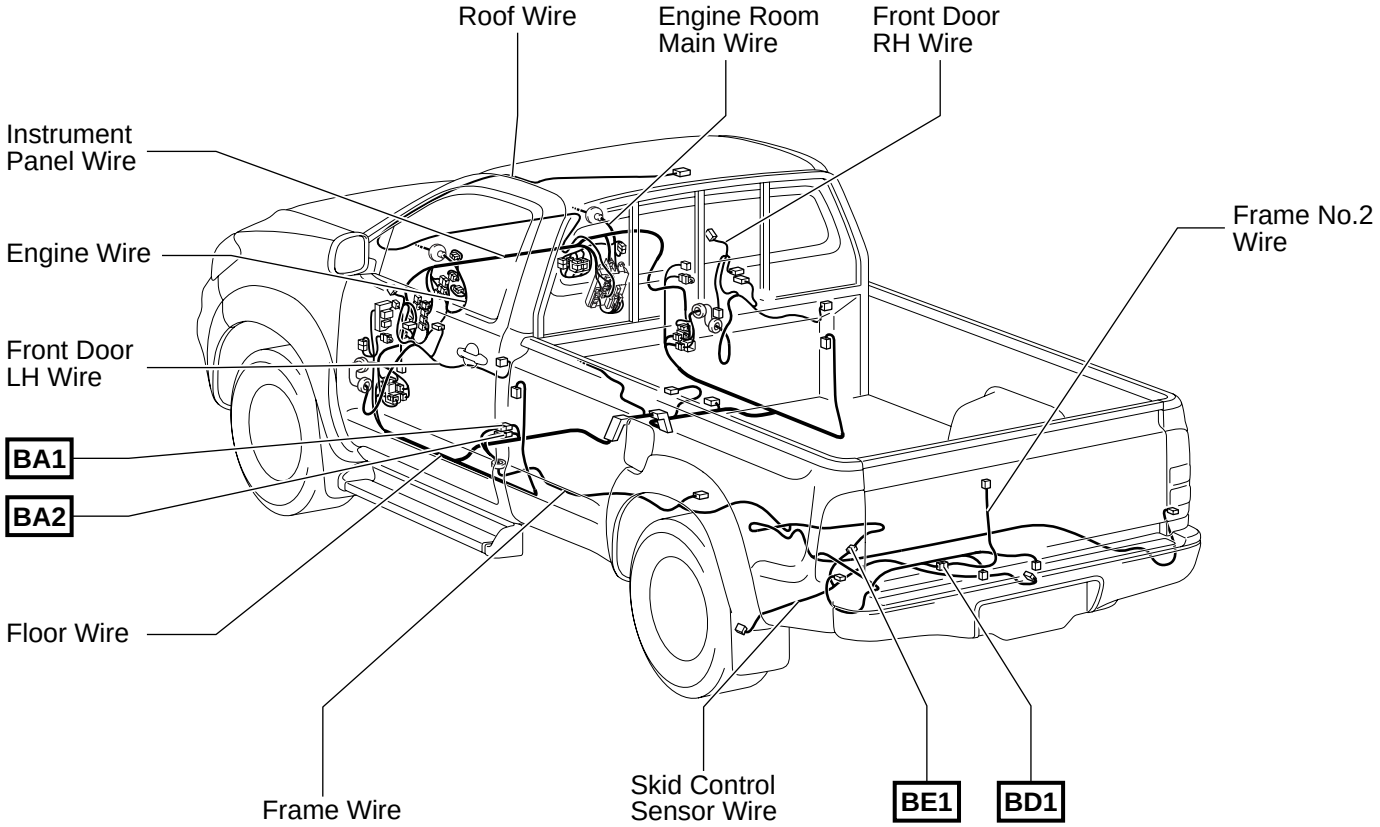

⬡ : Location of Splice Points

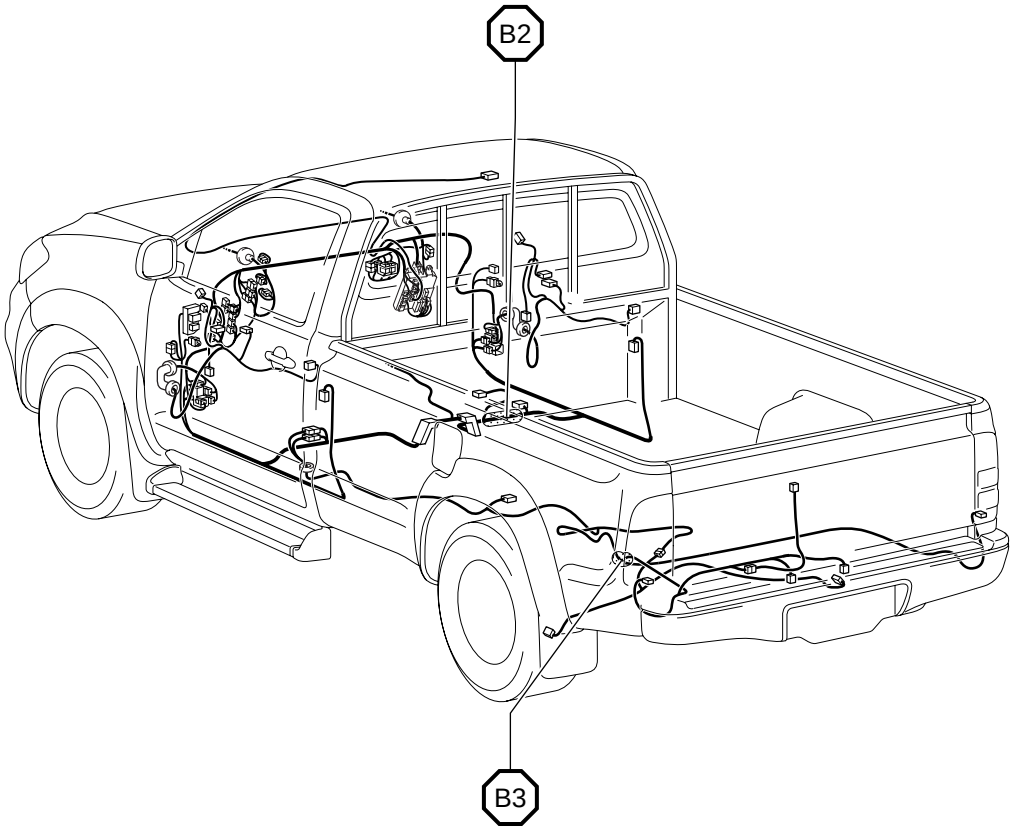

cardiagn.com

Connector Joining Wire Harness and Wire Harness

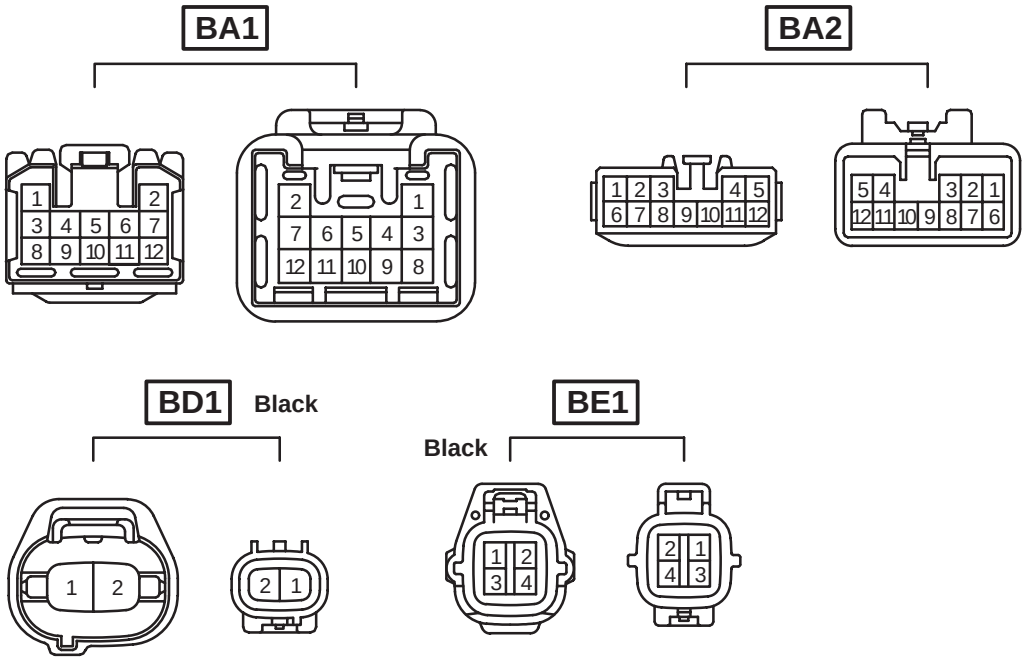

Code	Joining Wire Harness and Wire Harness (Connector Location)
BA1	Frame Wire and Floor Wire (Under the Front Seat LH)
BA2	
BD1	Frame No.2 Wire and Frame Wire (Under the Back Panel LH)
BE1	Frame Wire and Skid Control Sensor Wire (Rear of the Rear Differential)

cardiagn.com

cardiagn.com

HILUX
ELECTRICAL WIRING DIAGRAM
SYSTEM CIRCUITS

	Page
ABS	116
Air Conditioner	178
Audio System	168
Back–Up Light	98
Charging	66
Cigarette Lighter	158
Clock	162
Combination Meter	172
Door Lock Control	130
ECT	108
Engine Control	68
Engine Immobilizer System	80
Front Fog Light	86
Front Wiper and Washer	152
Headlight	84
Horn	156
Illumination	88
Interior Light	100
Key Reminder	104
Light Reminder	104
Multiplex Communication System (CAN)	82
Power Outlet	160
Power Source	60
Power Window	148
Rear Window Defogger	164
Remote Control Mirror	166
Seat Belt Warning	106
Shift Lock	128
SRS	121
Starting	64
Stop Light	96
Taillight	88
Theft Deterrent	142
Turn Signal and Hazard Warning Light	92
Wireless Door Lock Control	136
4WD	124

Power Source

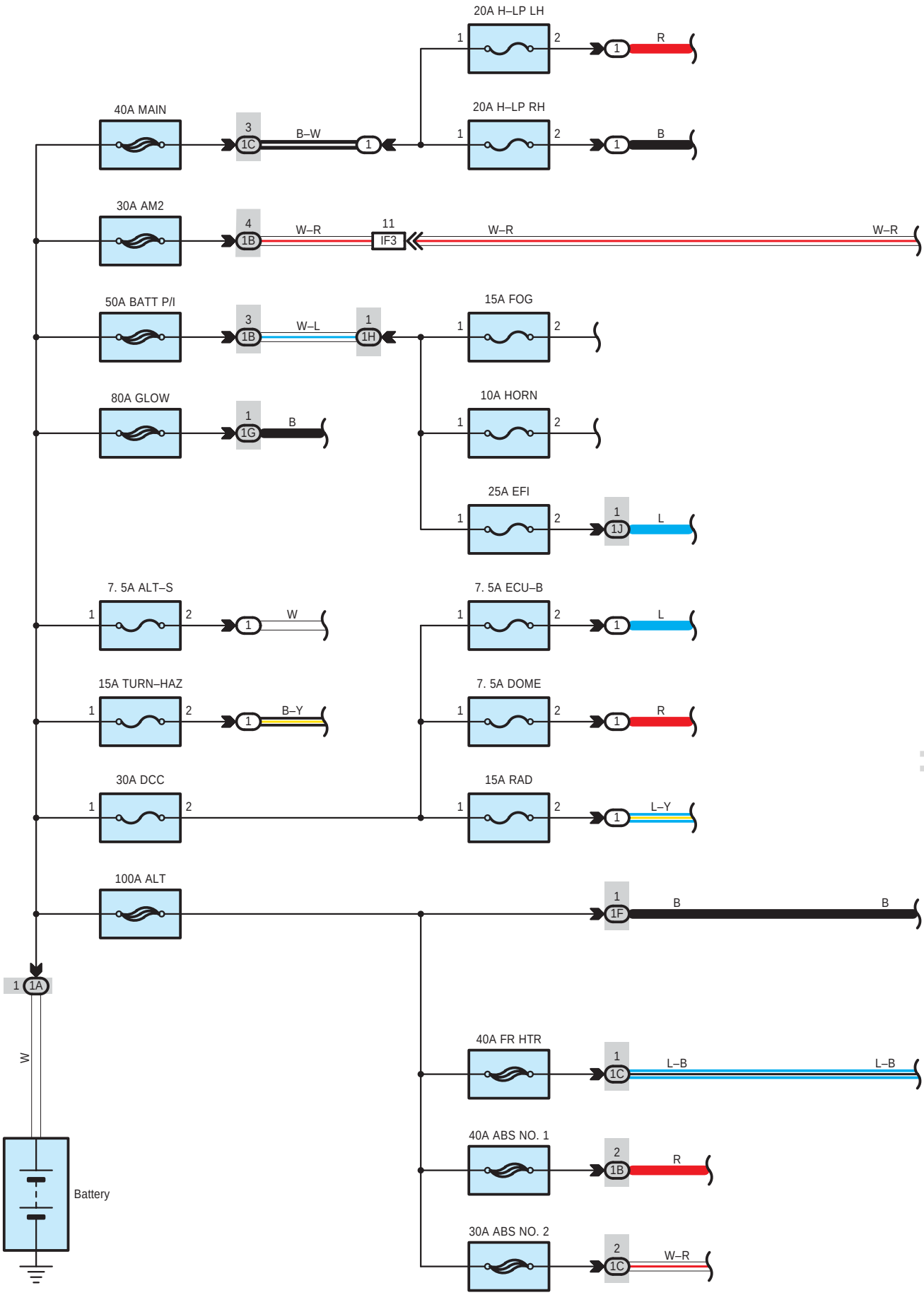

cardiagn.com

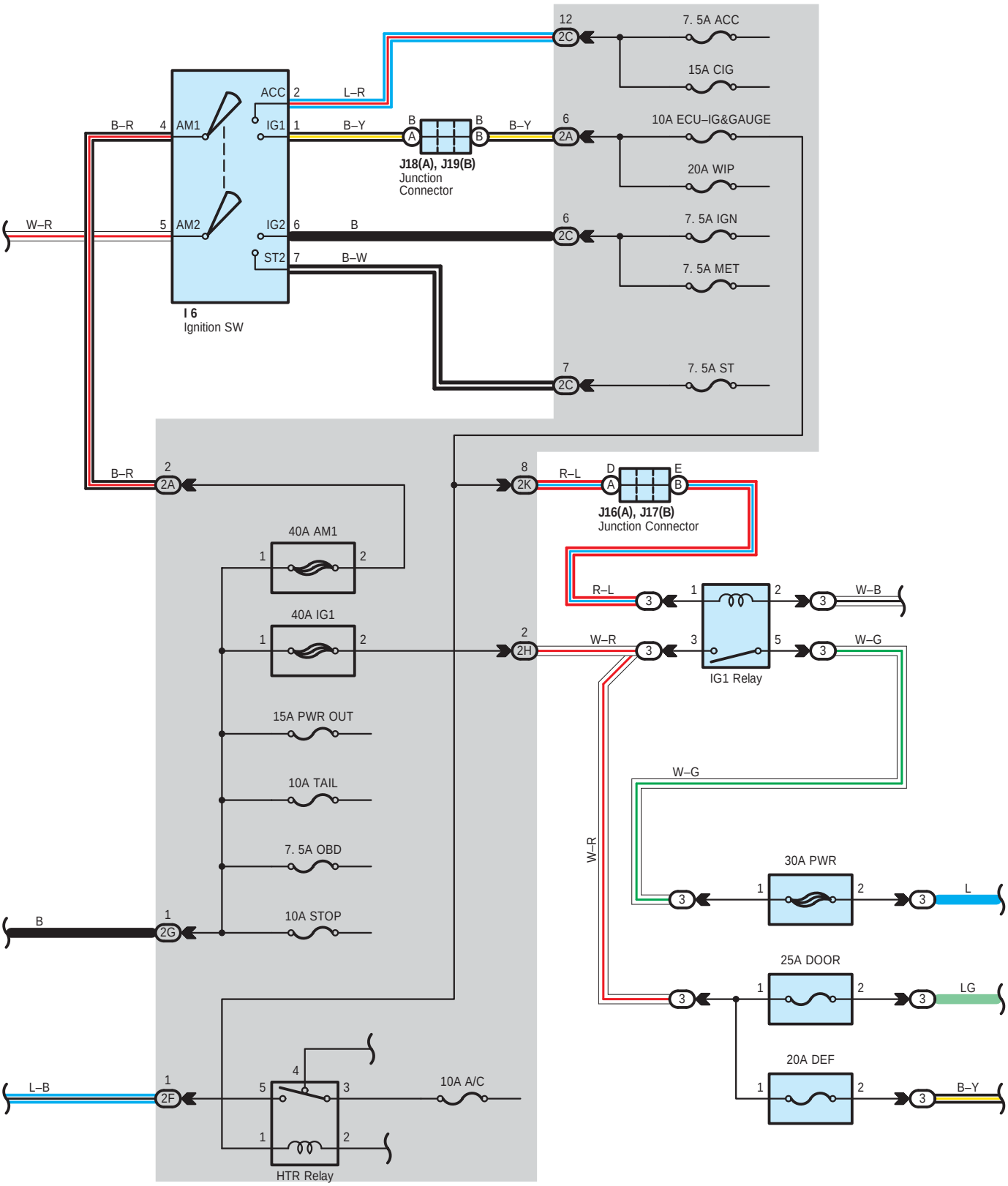

cardiagn.com

Service Hints

I6 Ignition SW

4–2 : Closed with the ignition SW at ACC or ON position
4–1 : Closed with the ignition SW at ON or ST position
5–6 : Closed with the ignition SW at ON or ST position
5–7 : Closed with the ignition SW at ST position

: Parts Location

Code		See Page	Code		See Page	Code		See Page
I6		38	J17	B	38	J19	B	38
J16	A	38	J18	A	38			

: Relay Blocks

Code	See Page	Relay Blocks (Relay Block Location)
1	22	Engine Room R/B (Engine Compartment Left)
3	35	R/B No.3 (Cowl Side Panel LH)

: Junction Block and Wire Harness Connector

Code	See Page	Junction Block and Wire Harness (Connector Location)
1A	23	Engine Room Main Wire and Engine Room J/B (Engine Compartment Left)
1B		
1C		
1F		
1G		
1H	24	
1J		
2A	28	Instrument Panel Wire and Driver Side J/B (Instrument Panel Brace RH)
2C		
2F	28	Engine Room Main Wire and Driver Side J/B (Instrument Panel Brace RH)
2G		
2H	28	Floor Wire and Driver Side J/B (Instrument Panel Brace RH)
2K		

: Connector Joining Wire Harness and Wire Harness

Code	See Page	Joining Wire Harness and Wire Harness (Connector Location)
IF3	50	Engine Room Main Wire and Instrument Panel Wire (Behind the Driver Side J/B)

cardiagn.com

cardiagn.com

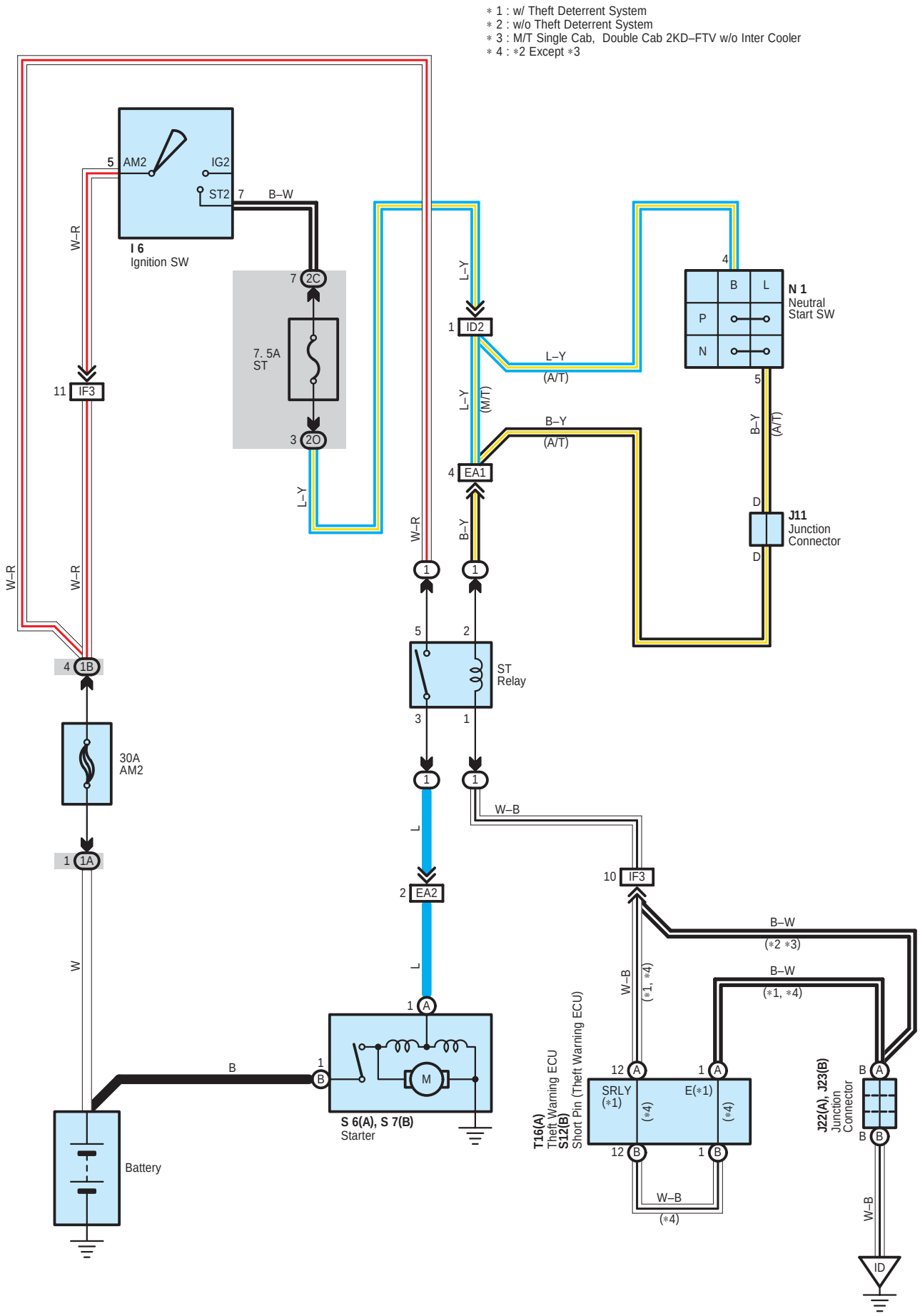

cardiagn.com

Service Hints

S6 (A), S7 (B) Starter

Point closed with the neutral start SW at P or N position and the ignition SW at ST position (A/T)
Point closed with the ignition SW at ST position (M/T)

I6 Ignition SW

5–7 : Closed with the ignition SW at ST position

N1 Neutral Start SW

4–5 : Closed with the neutral start SW at P or N position

ST Relay

5–3 : Closed with the neutral start SW at P or N position and the ignition SW at ST position (A/T)
5–3 : Closed with the ignition SW at ST position (M/T)

: Parts Location

Code		See Page	Code		See Page	Code		See Page
I6		38	J23	B	38	S7	B	37
J11		38	N1		37	S12	B	39
J22	A	38	S6	A	37	T16	A	39

: Relay Blocks

Code	See Page	Relay Blocks (Relay Block Location)
1	22	Engine Room R/B (Engine Compartment Left)

: Junction Block and Wire Harness Connector

Code	See Page	Junction Block and Wire Harness (Connector Location)
1A	23	Engine Room Main Wire and Engine Room J/B (Engine Compartment Left)
1B		
2C	28	Instrument Panel Wire and Driver Side J/B (Instrument Panel Brace RH)
2O	29	

: Connector Joining Wire Harness and Wire Harness

Code	See Page	Joining Wire Harness and Wire Harness (Connector Location)
EA1	46	Engine Wire and Engine Room Main Wire (Inside of Engine Room R/B and Engine Room J/B)
EA2		
ID2	48	Engine Wire and Instrument Panel Wire (Behind the Glove Box)
IF3	50	Engine Room Main Wire and Instrument Panel Wire (Behind the Driver Side J/B)

: Ground Points

Code	See Page	Ground Points Location
ID	48	Instrument Panel Reinforcement Center

cardiagn.com

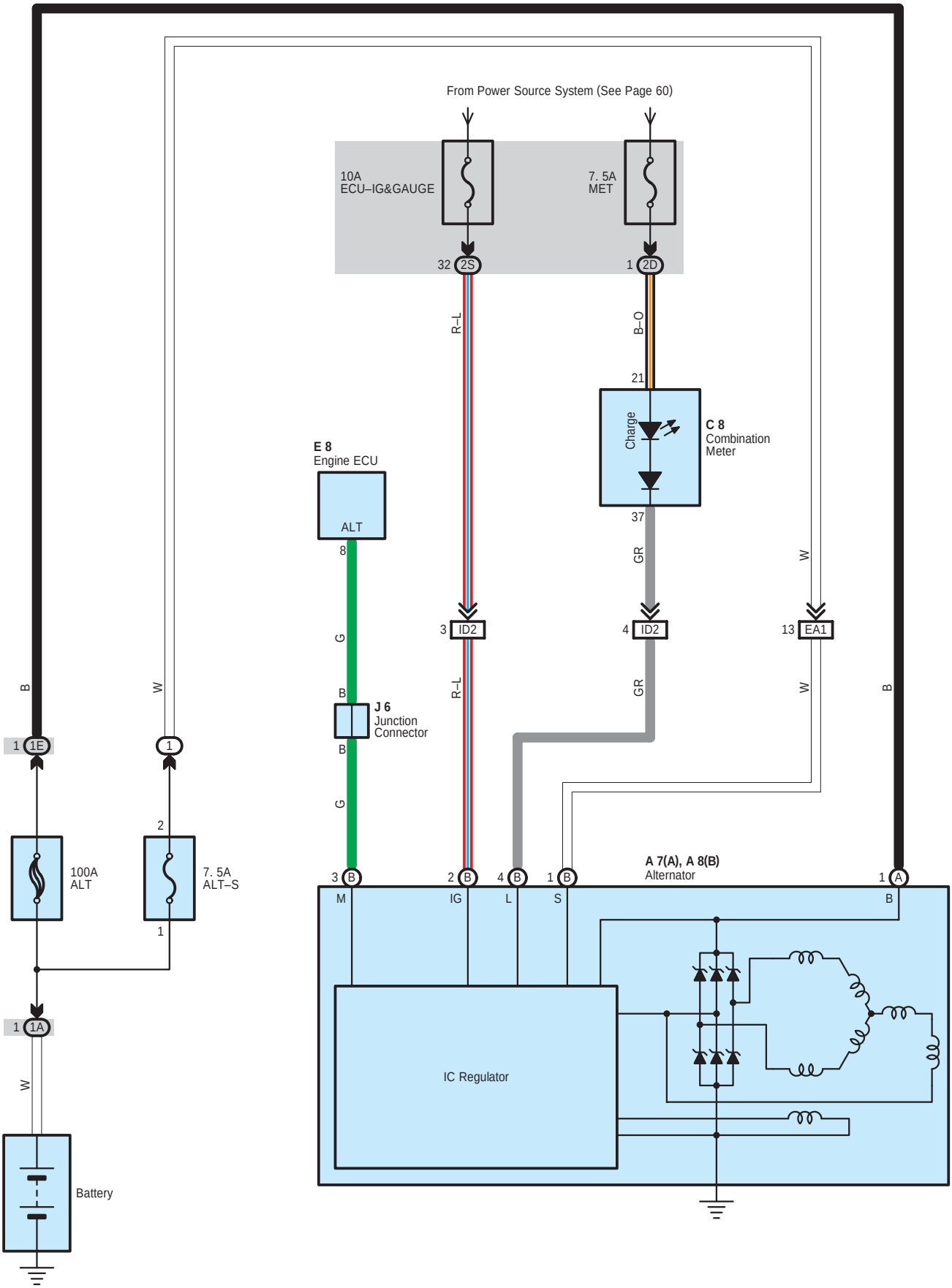

cardiagn.com

Service Hints

A7 (A) Alternator

(A) 1–Ground : 13.2–14.0 volts with the engine running at 5000 rpm and 115˚C (239˚F)

: Parts Location

Code		See Page	Code	See Page	Code	See Page
A7	A	36	C8	38	J6	38
A8	B	36	E8	38		

: Relay Blocks

Code	See Page	Relay Blocks (Relay Block Location)
1	22	Engine Room R/B (Engine Compartment Left)

: Junction Block and Wire Harness Connector

Code	See Page	Junction Block and Wire Harness (Connector Location)
1A	23	Engine Room Main Wire and Engine Room J/B (Engine Compartment Left)
1E	23	Engine Wire and Engine Room J/B (Engine Compartment Left)
2D	28	Instrument Panel Wire and Driver Side J/B (Instrument Panel Brace RH)
2S	29	

: Connector Joining Wire Harness and Wire Harness

Code	See Page	Joining Wire Harness and Wire Harness (Connector Location)
EA1	46	Engine Wire and Engine Room Main Wire (Inside of Engine Room R/B and Engine Room J/B)
ID2	48	Engine Wire and Instrument Panel Wire (Behind the Glove Box)

cardiagn.com

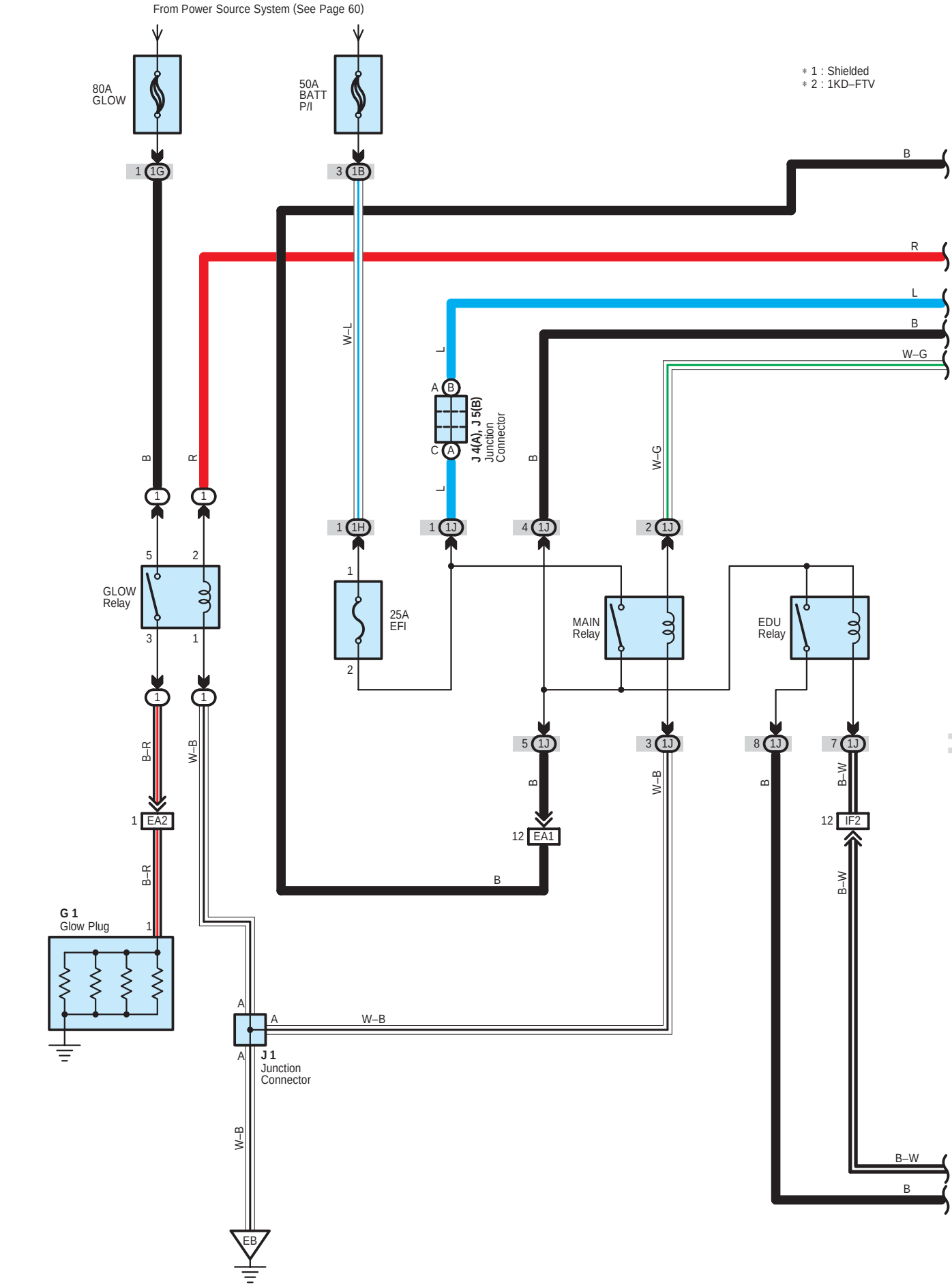

cardiagn.com

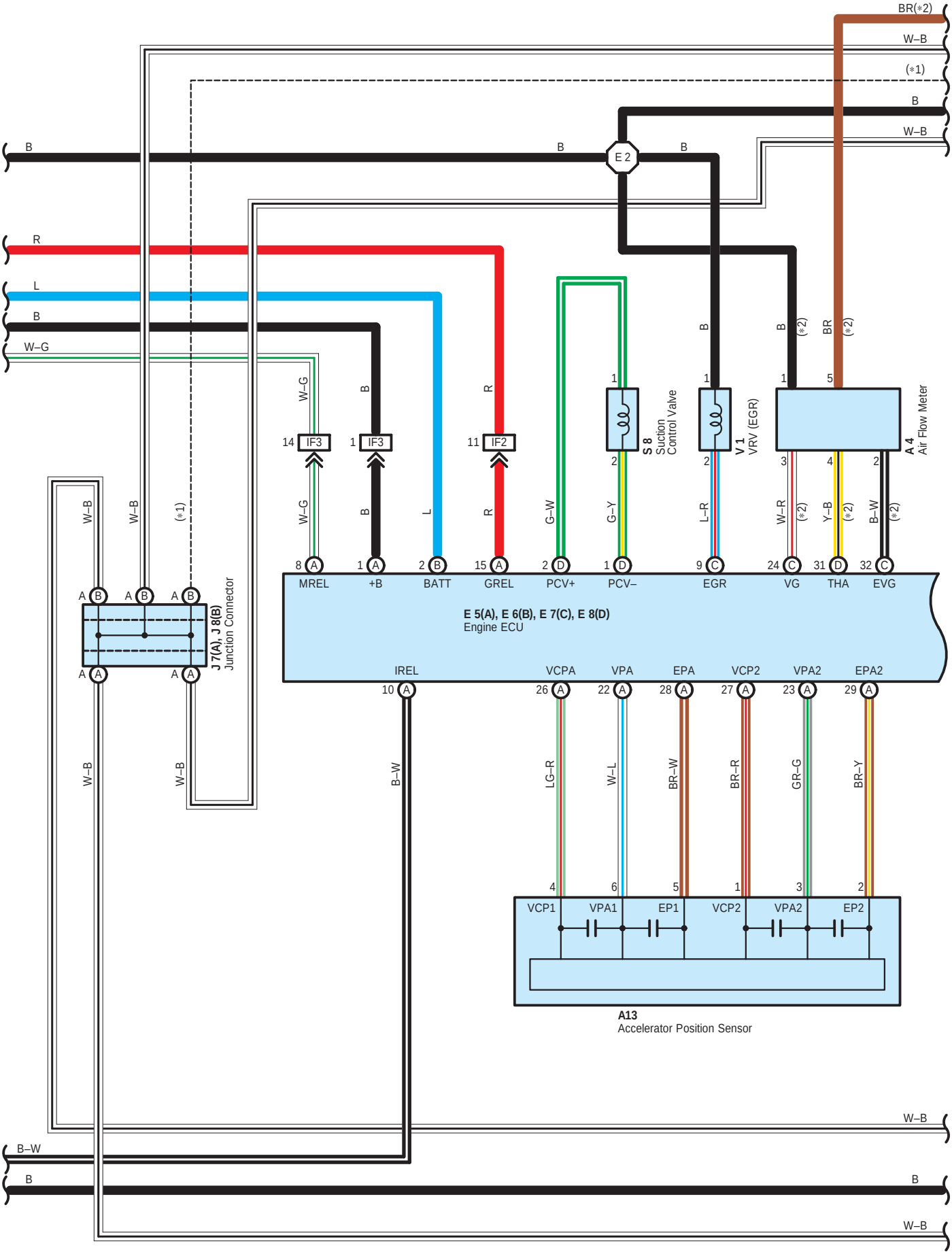

cardiagn.com

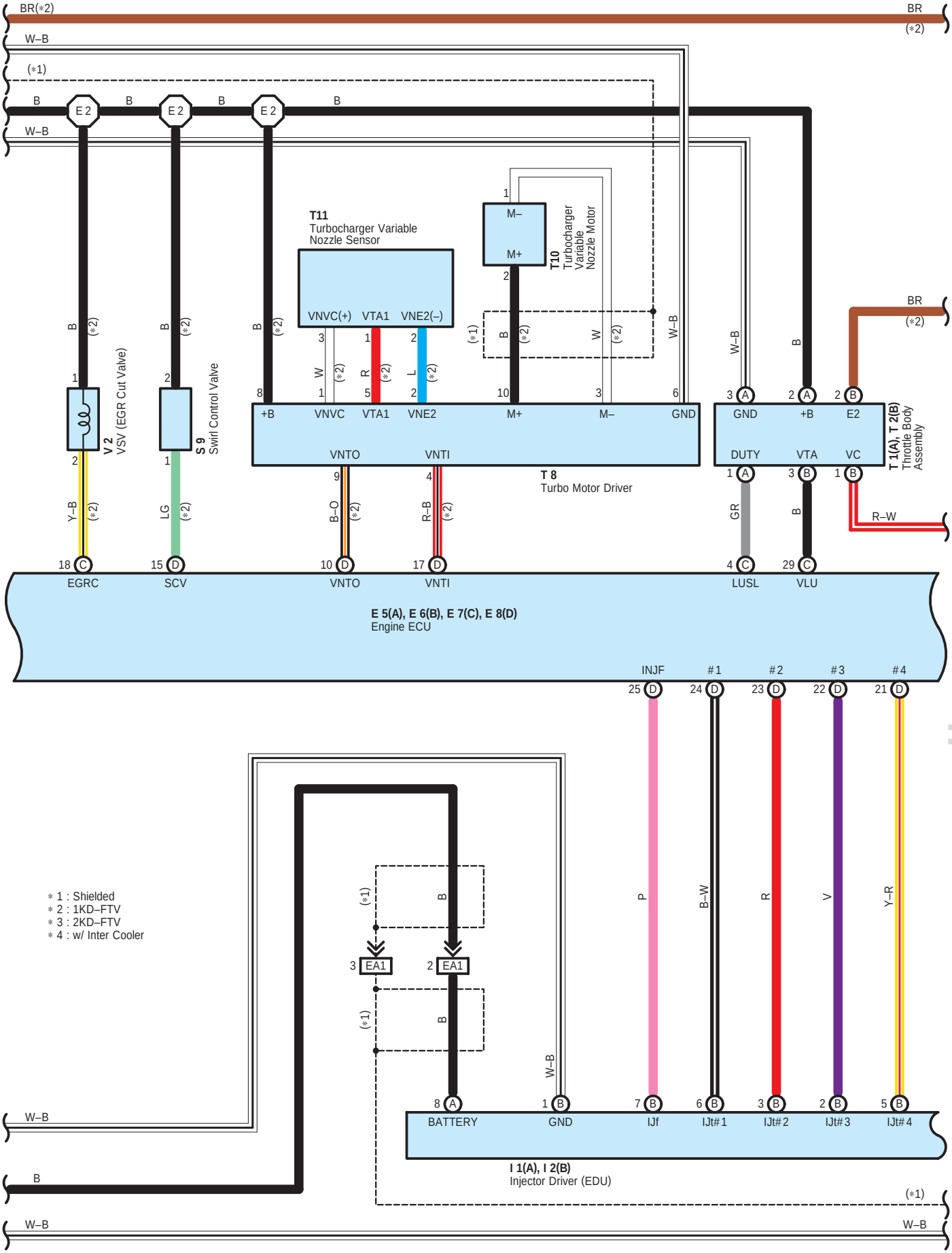

cardiagn.com

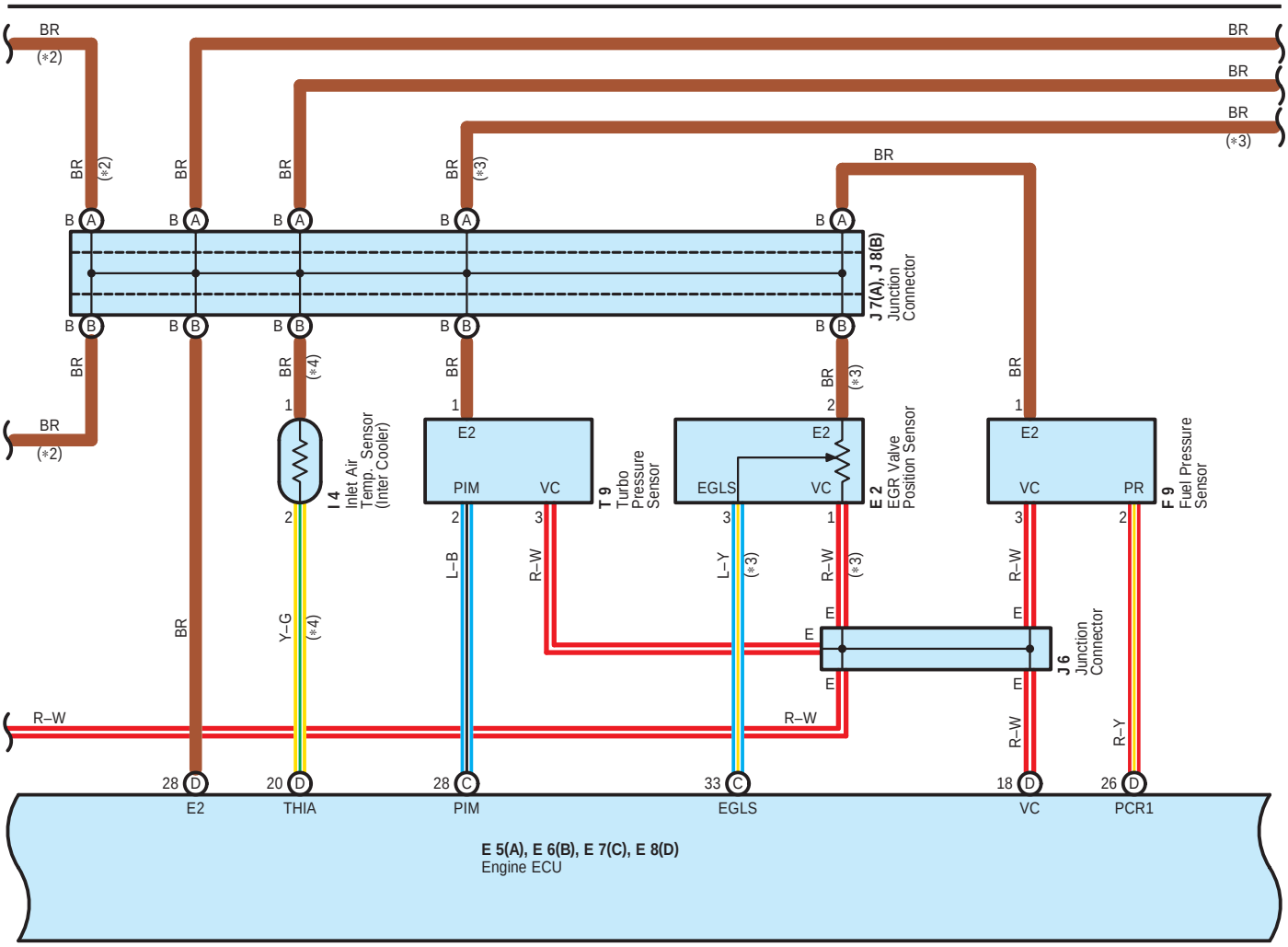

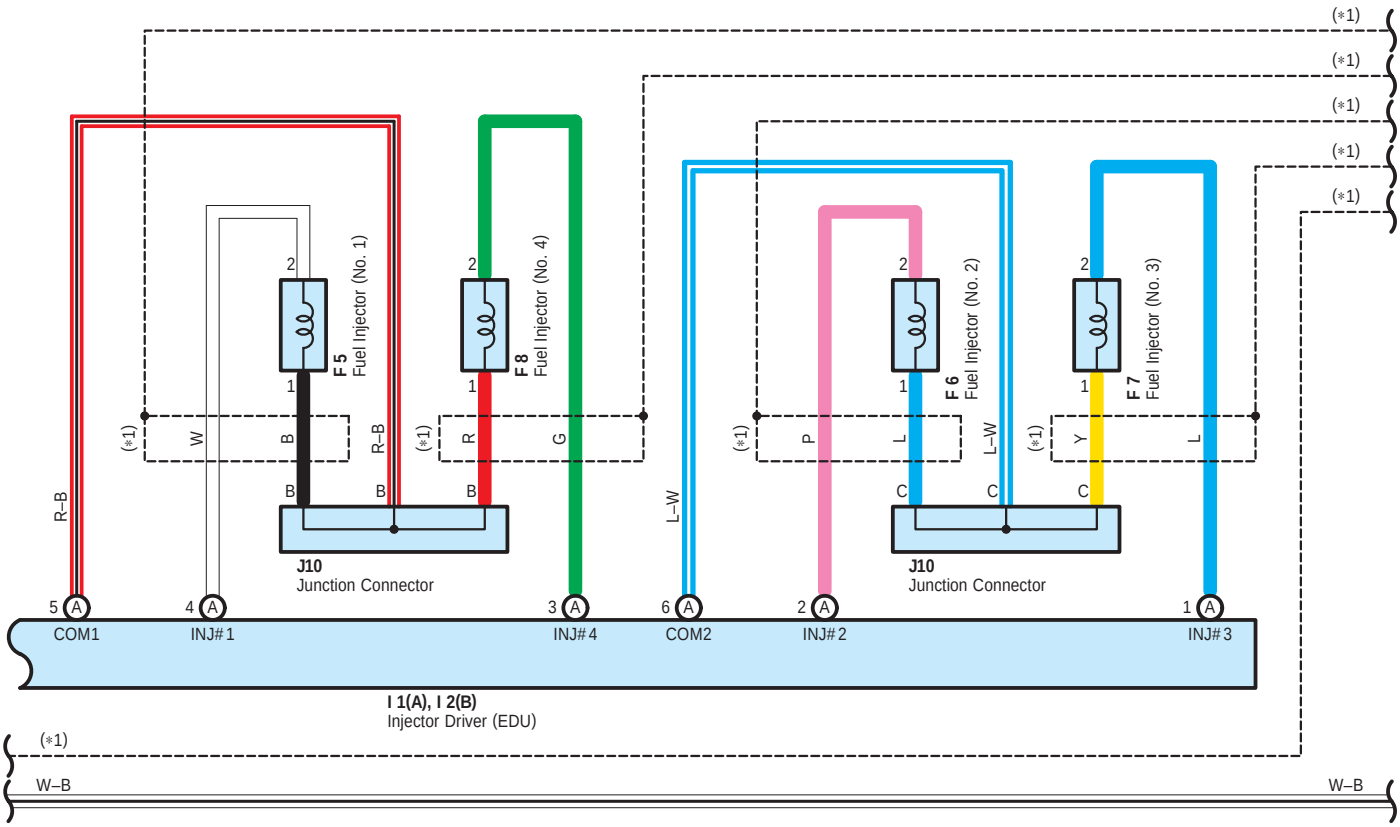

cardiagn.com

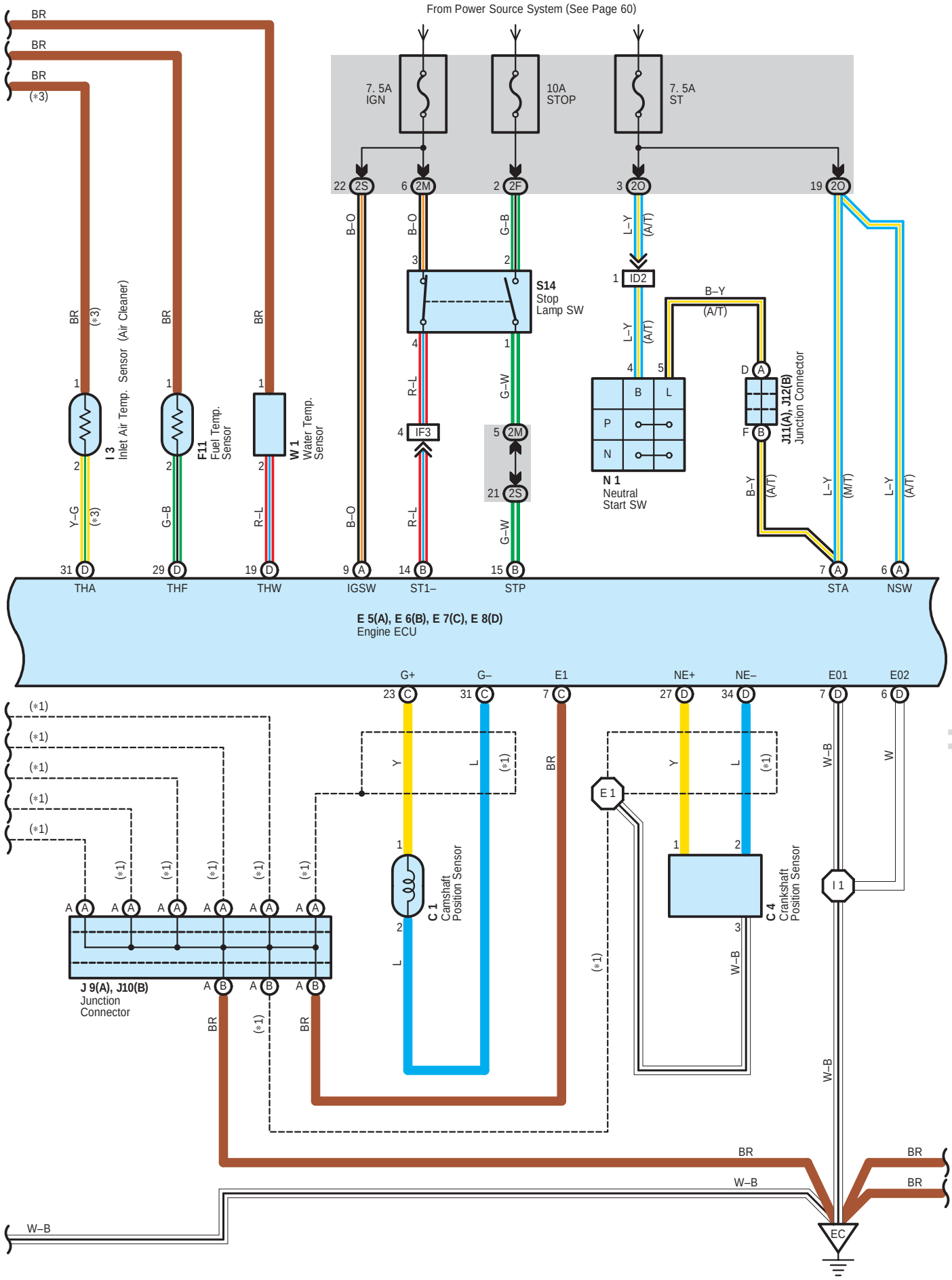

cardiagn.com

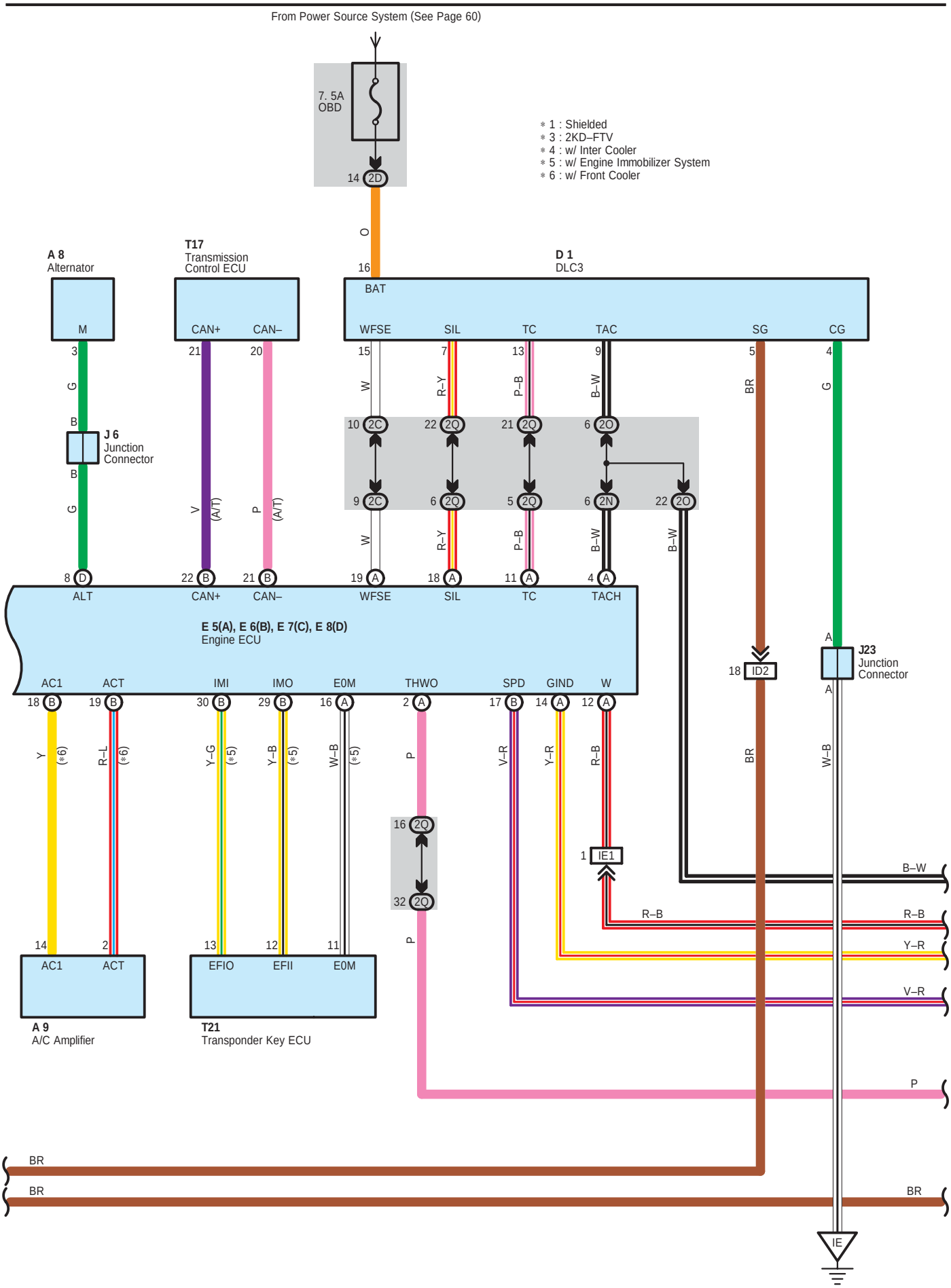

cardiagn.com

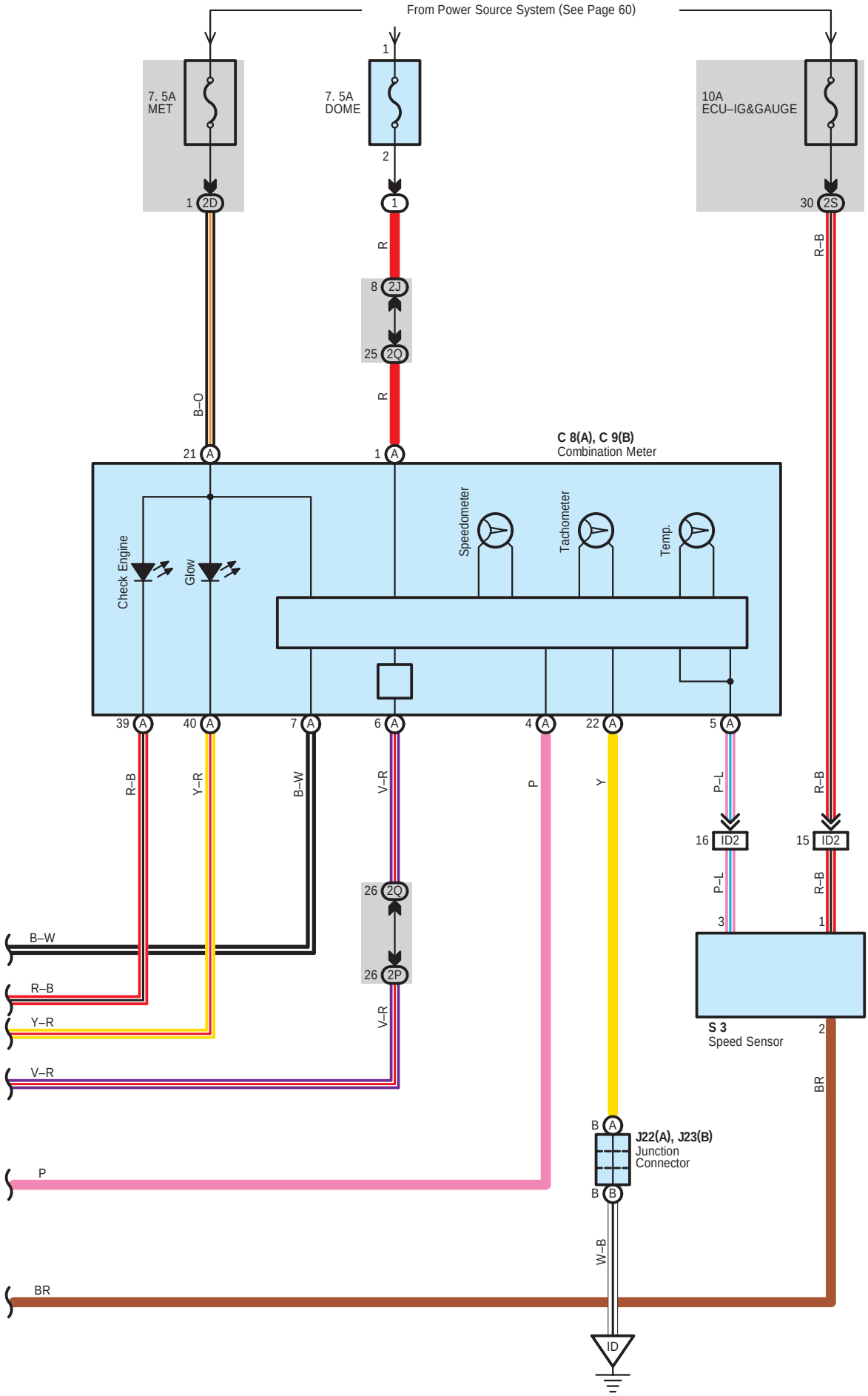

cardiagn.com

System Outline

This system utilizes an engine ECU and maintains overall control of the engine, transmission and so on. An outline of the engine control is explained here.

1. Input Signals

(1) Water temp. signal circuit

The water temp. sensor detects the engine coolant temp. and has a built–in thermistor with a resistance varies according to the engine coolant temp. Thus the engine coolant temp. is input in the form of a control signal to TERMINAL THW of the engine ECU.

(2) Intake air temp. signal circuit

The intake air temp. sensor is detects the intake air temp. of air cleaner, which is input as a control signal to TERMINAL THA of the engine ECU.

The intake air temp. sensor is detects the intake air temp. of inter cooler, which is input as a control signal to TERMINAL THIA of the engine ECU.

(3) RPM signal circuit

Camshaft position and crankshaft position are detected by the camshaft position sensor and crankshaft position sensor. Camshaft position is input as a control signal to TERMINAL G+ of the engine ECU, and engine RPM is input into TERMINAL NE+.

(4) Throttle signal circuit

The accelerator position sensor detects the accelerator pedal opening angle, which is input as a control signal to TERMINALS VPA and VPA2 of the engine ECU.

(5) Vehicle speed signal circuit

The speed sensor detects the vehicle speed and inputs a control signal to TERMINAL SPD of the engine ECU via the combination meter.

(6) Battery signal circuit

Voltage is constantly applied to TERMINAL BATT of the engine ECU. When the ignition SW is turned to on, voltage for engine ECU operation is applied via the MAIN relay to TERMINAL +B of the engine ECU.

(7) Started signal circuit

To confirm that the engine is cranking, the voltage applied to the starter motor during cranking is detected and is input as a control signal to TERMINAL STA of the engine ECU.

(8) Fuel temp. signal circuit

The fuel temp. sensor is detects the fuel temp., which is input as a control signal to TERMINAL THF of the engine ECU.

(9) Intake air vacuum pressure signal system

Intake air vacuum pressure is detected by the turbo pressure sensor and is input as a control signal to TERMINAL PIM of the engine ECU.

cardiagn.com

2. Control System

* EGR control
  The EGR control system detects the signals from each sensor, then the current is output to the TERMINAL EGR to control the VRV (EGR).
* Common rail pressure control
  The target rail pressure is calculated according to the engine status (Accelerator opening, engine speed) and environmental change detected by sensors. The fuel amount to be pressure–fed from the supply pump is calculated so as to match the indicated value of rail pressure sensor with the target value and the signal is sent to the intake amount adjusting valve of the supply pump in order to control the rail pressure.
* Fuel injection timing control
  The fuel injection timing is controlled by calculating the basic fuel injection timing based on the engine status (Accelerator opening, engine speed), making corrections according to environmental change detected by sensors, then sending a signal to the solenoid control valve of the injector via the injector driver (EDU).
* Fuel injection volume control
  The fuel injection volume is controlled by calculating the basic fuel injection volume based on the engine status (Accelerator opening, engine speed), making corrections according to environmental change detected by sensors and the inside pressure conditions in the rail, then sending a signal to the solenoid control valve of the injector via the injector driver (EDU).
* Pilot injection control
  The fuel injection volume and timing are controlled by calculating the pilot injection volume/timing based on the engine status (Accelerator opening, engine speed), making corrections according to environmental change detected by sensors, then sending a signal to the solenoid control valve of the injector via the injector driver (EDU).

3. Diagnosis System

With the diagnosis system, when there is a malfunctioning in the engine ECU signal system, the malfunction system is recorded in the memory. The malfunctioning system can be found by reading the display (Code) of the check engine warning light.

4. Fail–Safe System

When a malfunction occurs in any system, if there is a possibility of engine trouble being caused by continued control based on the signals from that system, the fail–safe system either controls the system by using data (Standard values) recorded in the engine ECU memory or else stops the engine.

cardiagn.com

Service Hints

E5 (A), E6 (B), E7 (C), E8 (D) Engine ECU

BATT–E1 : Always 9.0–14.0 volts
+B–E1 : 9.0–14.0 volts (Ignition SW at ON position)
VC, VCPA, VCP2–E2 : 4.5–5.5 volts (Ignition SW at ON position)
STA–E1 : 6.0 volts or more (Engine cranking)
MREL–E1 : 9.0–14.0 volts (Ignition SW at ON position)
0–1.5 volts (More than 10 seconds passed away after the ignition SW was turned to OFF)
IREL–E1 : 0–1.5 volts (Engine idling)
9.0–14.0 volts (Ignition SW at OFF position)
GREL–E1 : 9.0–14.0 volts (Engine cranking)
0–1.5 volts (Engine idling (More than 600 seconds passed away after the engine started to run))
NE+ –NE– : Pulse generation (Engine idling)
G+ –G– : Pulse generation (Engine idling)
SPD–E1 : Pulse generation (In driving at about 20km/h)
VPA–EPA : 0.5–1.1 volts (Ignition SW on and accelerator pedal fully closed)
3.0–4.6 volts (Ignition SW on and accelerator pedal fully opened)
VPA2–EPA2 : 0.9–2.3 volts (Ignition SW on and accelerator pedal fully closed)
3.4–5.0 volts (Ignition SW on and accelerator pedal fully opened)
STP–E1 : 7.5–14.0 volts (Ignition SW on and brake pedal depressed)
0–1.5 volts (Ignition SW on and brake pedal released)
ST1– –E1 : 0–1.5 volts (Ignition SW on and brake pedal depressed)
7.5–14.0 volts (Ignition SW on and brake pedal released)
PIM–E2 : 1.2–1.6 volts (When a negative pressure of 40 kPA (300 mmhg) is applied)
1.3–1.9 volts (During air release)
3.2–3.8 volts (When a pressure of 69 kPA (0.7 kg/cm^3) is applied)
THW–E2 : 0.2–1.0 volts (During warm–up and coolant temp. 60˚C, 140˚F–120˚C, 248˚F)
THA–E2 : 0.5–3.4 volts (During warm–up and intake temp. 0˚C, 32˚F–80˚C, 176˚F)
THIA–E2 : 0.5–3.4 volts (During warm–up and intake air temp. 0˚C, 32˚F–80˚C, 176˚F)
THF–E2 : 0.5–3.4 volts (During cooling with the ignition SW kept at the ON position)
VG–E2 : 0.5–3.4 volts (Engine idling)
PCR1–E2 : 1.3–1.8 volts (Engine idling)
ALT–E1 : Pulse generation (Engine idling)
PCV+ –PCV– : Pulse generation (Engine idling)
#1, #2, #3, #4–E1 : Pulse generation (Engine idling)
INJF–E1 : Pulse generation (Engine idling)
EGR–E1 : 9.0–14.0 volts (Ignition SW at ON position)
: Pulse generation (EGR at ON position (Staying at 1500r/min after warm–up))
EGLS–E2 : 0.6–1.4 volts (Ignition SW at ON position)
AC1–E1 : 0–1.5 volts (A/C SW on (Magnetic clutch ON))
7.5–14.0 volts (A/C SW off)
ACT–E1 : 3.5–14.0 volts (Ignition SW at ON position)
0–1.5 volts (During air conditioner's operation cut
(For 5 seconds during driving at 30km/h or slower at full throttle))
W–E1 : 0–3.0 volts (Check engine warning light lights up and ignition SW at ON position)
9.0–14.0 volts (Engine idling and except check engine warning light lights up)
GIND–E1 : 0–3.0 volts (Glow indicator light lights up and ignition SW at ON position)
9.0–14.0 volts (Engine idling)
TACH–E1 : Pulse generation (Engine idling)
THWO–E1 : Pulse generation (Engine idling)
TC–E1 : 9.0–14.0 volts (Ignition SW at ON position)
0–3.0 volts (The DLC3 is shorted between the TERMINALS TC and CG)
CAN+ –CAN– : 54.0–69.0 Ω (More than 10 seconds passed away after the ignition SW was turned to OFF)
VNTO–E1 : Pulse generation (Engine idling)
VNTI–E1 : Pulse generation (Engine idling)
NSW–E1 : 0–0.3 volts (Shift position in P or N position)
9–14.0 volts (Other shift position in P or N position)

cardiagn.com

: Parts Location

Code	See Page	Code	See Page	Code	See Page
A4	36	F9	36	J23 B	38
A8	36	F11	36	N1	37
A9	38	G1	36	S3	37
A13	38	I1 A	36	S8	37
C1	36	I2 B	36	S9	37
C4	36	I3	36	S14	39
C8 A	38	I4	36	T1 A	37
C9 B	38	J1	37	T2 B	37
D1	38	J4 A	38	T8	39
E2	36	J5 B	38	T9	37
E5 A	38	J6	38	T10	37
E6 B	38	J7 A	38	T11	37
E7 C	38	J8 B	38	T17	39
E8 D	38	J9 A	38	T21	39
F5	36	J10 B	38	V1	37
F6	36	J11 A	38	V2	37
F7	36	J12 B	38	W1	37
F8	36	J22 A	38		

: Relay Blocks

Code	See Page	Relay Blocks (Relay Block Location)
1	22	Engine Room R/B (Engine Compartment Left)

: Junction Block and Wire Harness Connector

Code	See Page	Junction Block and Wire Harness (Connector Location)
1B	23	Engine Room Main Wire and Engine Room J/B (Engine Compartment Left)
1G		
1H	24	
1J		
2C	28	Instrument Panel Wire and Driver Side J/B (Instrument Panel Brace RH)
2D		
2F	28	Engine Room Main Wire and Driver Side J/B (Instrument Panel Brace RH)
2J		
2M		
2N	29	Instrument Panel Wire and Driver Side J/B (Instrument Panel Brace RH)
2O		
2P		
2Q		
2S		

: Connector Joining Wire Harness and Wire Harness

Code	See Page	Joining Wire Harness and Wire Harness (Connector Location)
EA1	46	Engine Wire and Engine Room Main Wire (Inside of Engine Room R/B and Engine Room J/B)
EA2		
ID2	48	Engine Wire and Instrument Panel Wire (Behind the Glove Box)
IE1	48	Instrument Panel Wire and Instrument Panel Wire (Instrument Panel Reinforcement LH)
IF2	50	Engine Room Main Wire and Instrument Panel Wire (Behind the Driver Side J/B)
IF3		

cardiagn.com

▽ : **Ground Points**

Code	See Page	Ground Points Location
EB	46	Left Side of the Fender Apron
EC	46	Rear Side of the Cylinder Block
ID	48	Instrument Panel Reinforcement Center
IE	48	Instrument Panel Reinforcement RH

⬡ : **Splice Points**

Code	See Page	Wire Harness with Splice Points	Code	See Page	Wire Harness with Splice Points
E1	46	Engine Wire	I1	50	Engine Wire
E2					

cardiagn.com

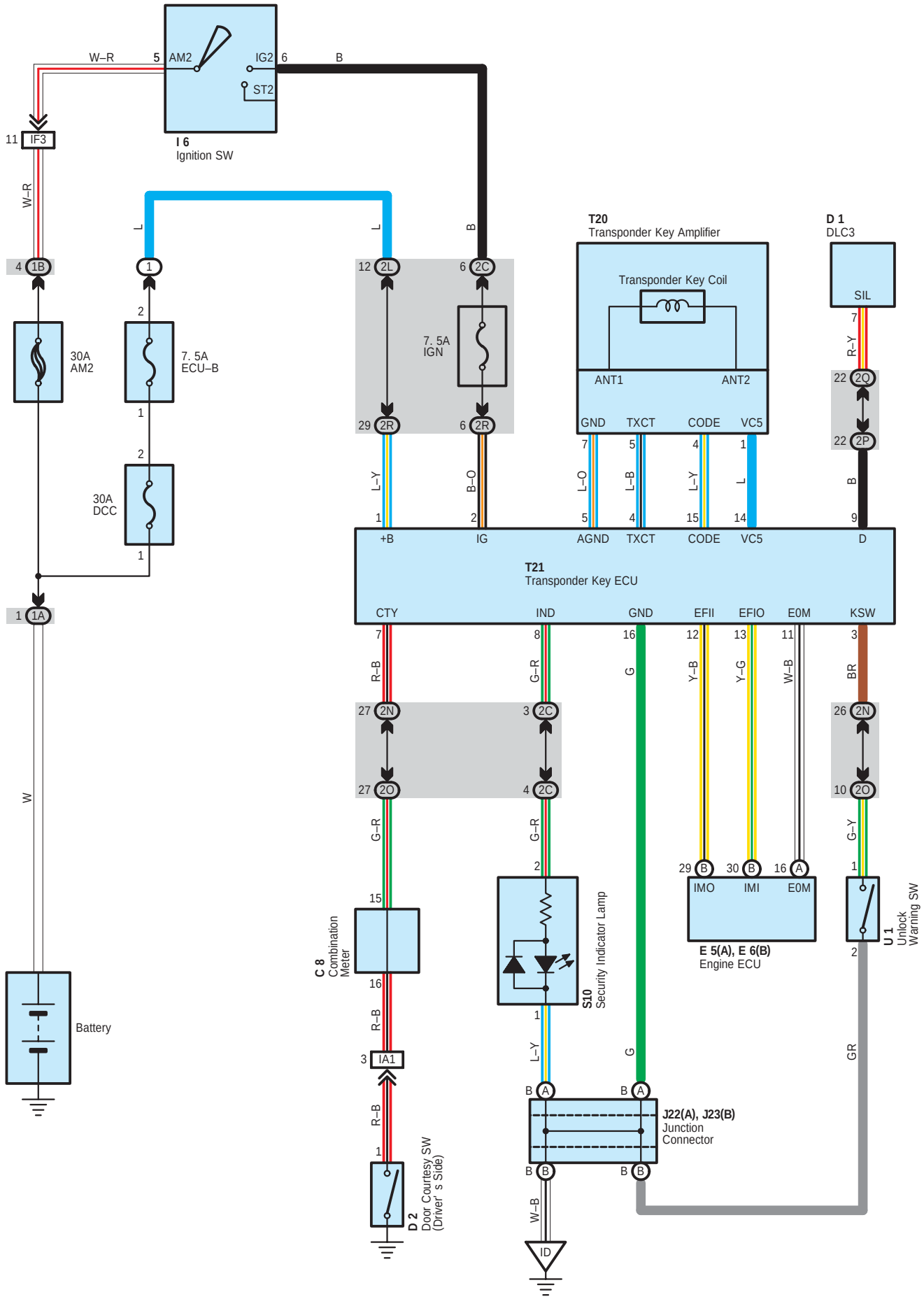

cardiagn.com

Service Hints

T21 Transponder Key ECU

1–Ground : Always approx. 12 volts
16–Ground : Always continuity
2–Ground : Approx. 12 volts with the ignition SW at ON position

: Parts Location

Code	See Page	Code		See Page	Code	See Page
C8	38	E5	A	38	S10	39
D1	38	E6	B	38	T20	39
D2	40 (Double Cab)	I6		38	T21	39
	42 (Extra Cab)	J22	A	38	U1	39
	44 (Single Cab)	J23	B	38		

: Relay Blocks

Code	See Page	Relay Blocks (Relay Block Location)
1	22	Engine Room R/B (Engine Compartment Left)

: Junction Block and Wire Harness Connector

Code	See Page	Junction Block and Wire Harness (Connector Location)
1A	23	Engine Room Main Wire and Engine Room J/B (Engine Compartment Left)
1B		
2C	28	Instrument Panel Wire and Driver Side J/B (Instrument Panel Brace RH)
2L	28	Engine Room Main Wire and Driver Side J/B (Instrument Panel Brace RH)
2N	29	Instrument Panel Wire and Driver Side J/B (Instrument Panel Brace RH)
2O		
2P		
2Q		
2R		

: Connector Joining Wire Harness and Wire Harness

Code	See Page	Joining Wire Harness and Wire Harness (Connector Location)
IA1	48	Instrument Panel Wire and Floor Wire (Left Kick Panel)
IF3	50	Engine Room Main Wire and Instrument Panel Wire (Behind the Driver Side J/B)

: Ground Points

Code	See Page	Ground Points Location
ID	48	Instrument Panel Reinforcement Center

cardiagn.com

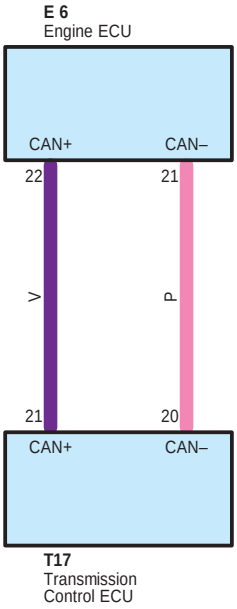

cardiagn.com

System Outline

Multiplex communication system (CAN) uses a serial communication protocol and communicates with a differential voltage. In this network system, TERMINALS CAN+ and CAN– are used for communication between the ECUs and sensors, and excellent data communication speed and communication error detecting facility are provided. This system is working for the following systems:

* Engine Control
* ECT

○ **: Parts Location**

Code	See Page	Code	See Page	Code	See Page
E6	38	T17	39		

cardiagn.com

Headlight

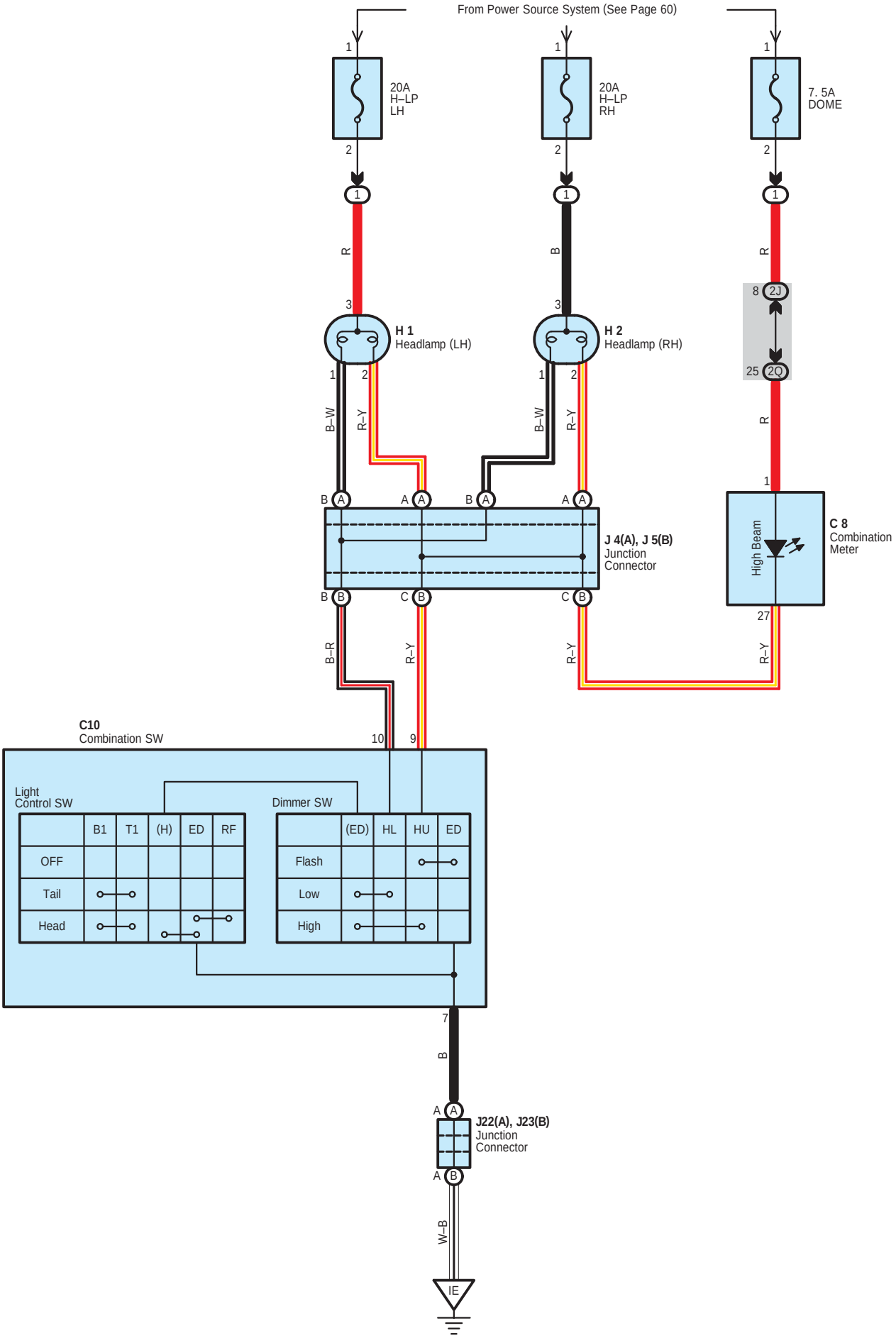

cardiagn.com

Service Hints

C10 Combination SW

10–7 : Continuity with the dimmer SW at LOW position and the light control SW at HEAD position

9–7 : Continuity with the dimmer SW at FLASH position or the dimmer SW at HIGH position and the light control SW at HEAD position

: Parts Location

Code	See Page	Code		See Page	Code		See Page
C8	38	H2		36	J22	A	38
C10	38	J4	A	38	J23	B	38
H1	36	J5	B	38			

: Relay Blocks

Code	See Page	Relay Blocks (Relay Block Location)
1	22	Engine Room R/B (Engine Compartment Left)

: Junction Block and Wire Harness Connector

Code	See Page	Junction Block and Wire Harness (Connector Location)
2J	28	Engine Room Main Wire and Driver Side J/B (Instrument Panel Brace RH)
2Q	29	Instrument Panel Wire and Driver Side J/B (Instrument Panel Brace RH)

: Ground Points

Code	See Page	Ground Points Location
IE	48	Instrument Panel Reinforcement RH

cardiagn.com

Front Fog Light

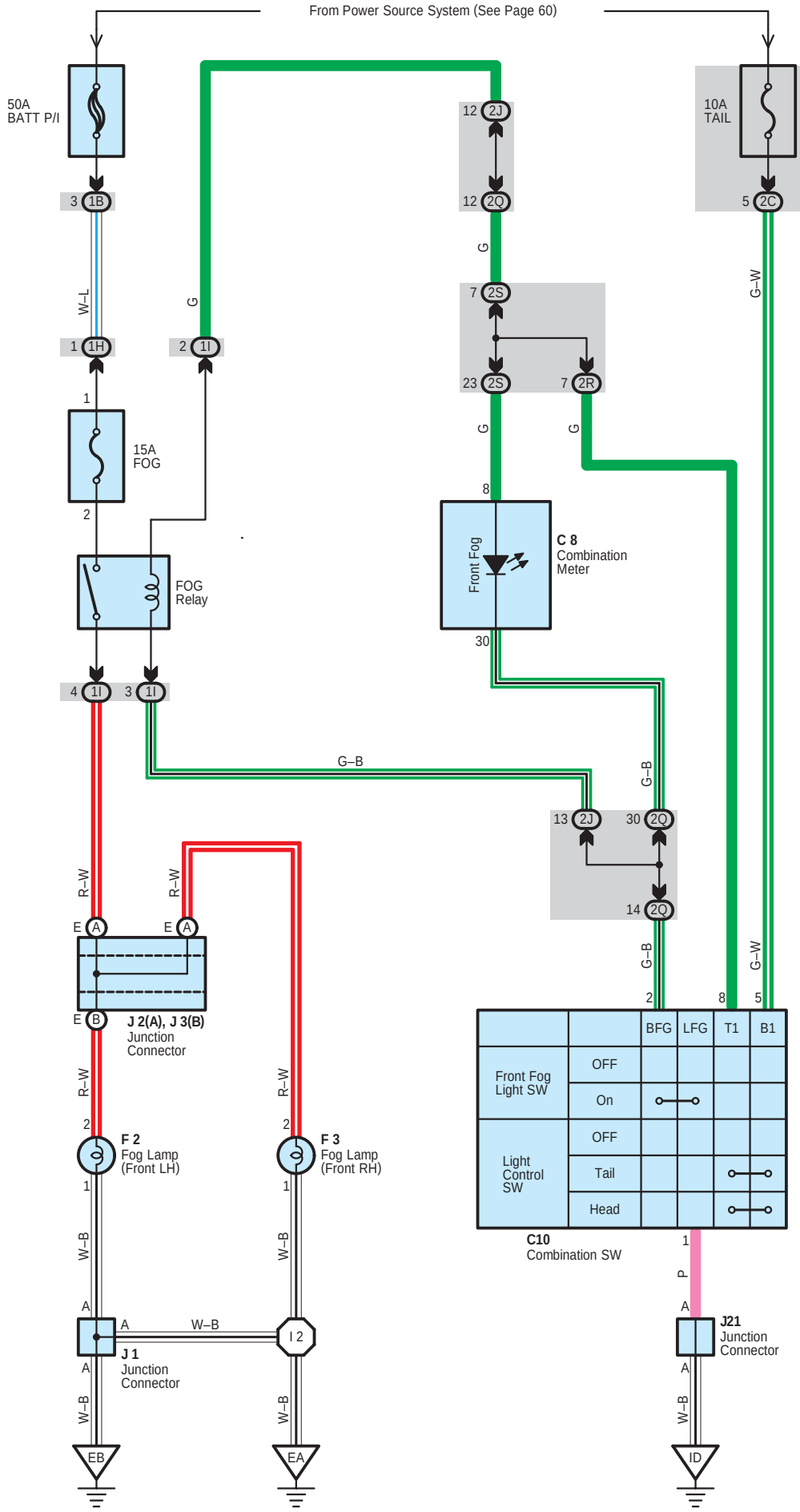

cardiagn.com

Service Hints

F2, F3 Fog Lamp (Front LH), (Front RH)

2–Ground : Approx. 12 volts with the light control SW at TAIL or HEAD position, dimmer SW at LOW position and front fog light SW at ON position

: Parts Location

Code	See Page	Code	See Page	Code	See Page
C8	38	F3	36	J3 B	38
C10	38	J1	37	J21	38
F2	36	J2 A	38		

: Junction Block and Wire Harness Connector

Code	See Page	Junction Block and Wire Harness (Connector Location)
1B	23	Engine Room Main Wire and Engine Room J/B (Engine Compartment Left)
1H	24	
1I		
2C	28	Instrument Panel Wire and Driver Side J/B (Instrument Panel Brace RH)
2J	28	Engine Room Main Wire and Driver Side J/B (Instrument Panel Brace RH)
2Q	29	Instrument Panel Wire and Driver Side J/B (Instrument Panel Brace RH)
2R		
2S		

: Ground Points

Code	See Page	Ground Points Location
EA	46	Right Side of the Fender Apron
EB	46	Left Side of the Fender Apron
ID	48	Instrument Panel Reinforcement Center

: Splice Points

Code	See Page	Wire Harness with Splice Points	Code	See Page	Wire Harness with Splice Points
I2	50	Engine Wire			

cardiagn.com

Taillight and Illumination

From Power Source System (See Page 60)

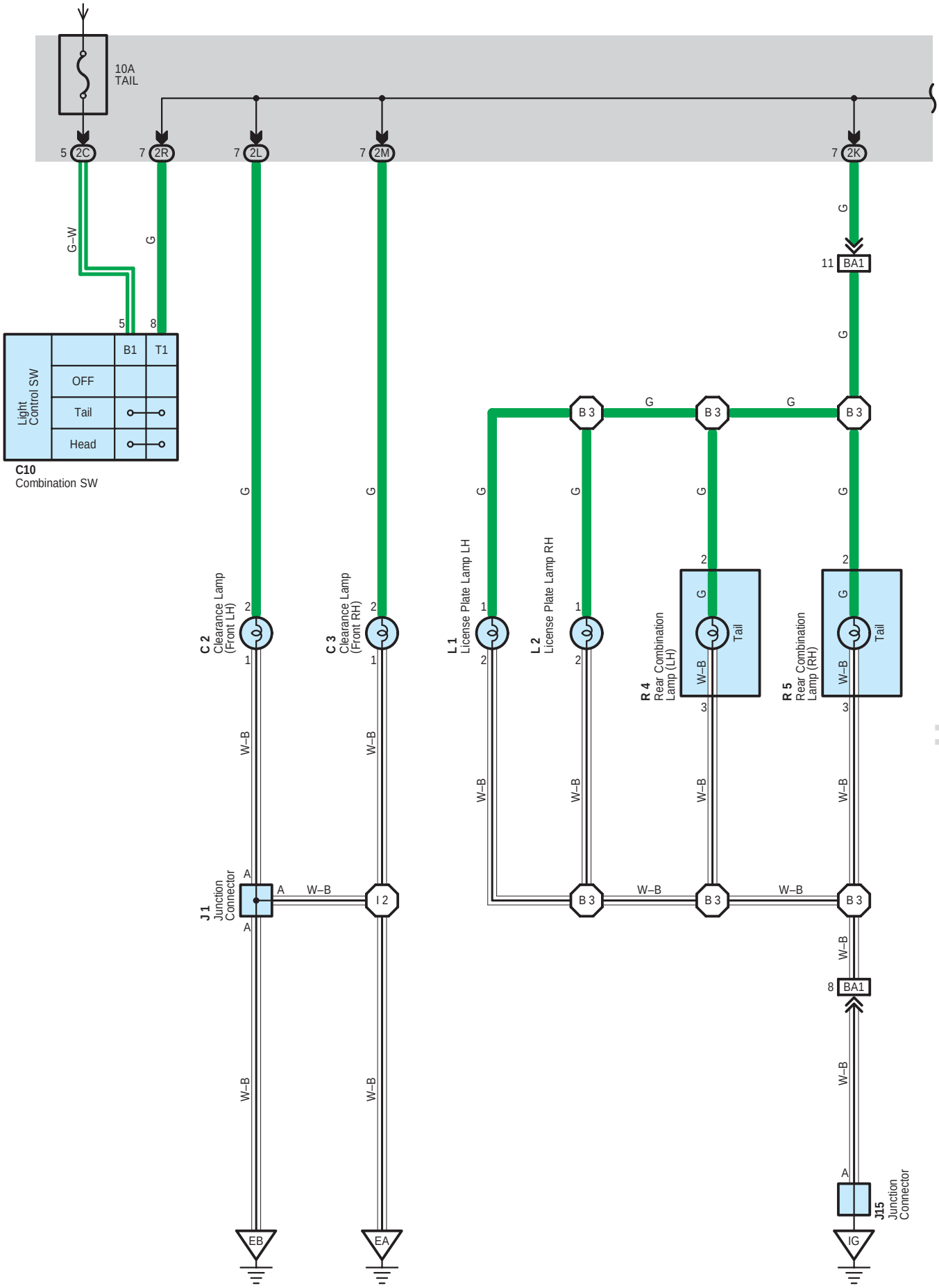

cardiagn.com

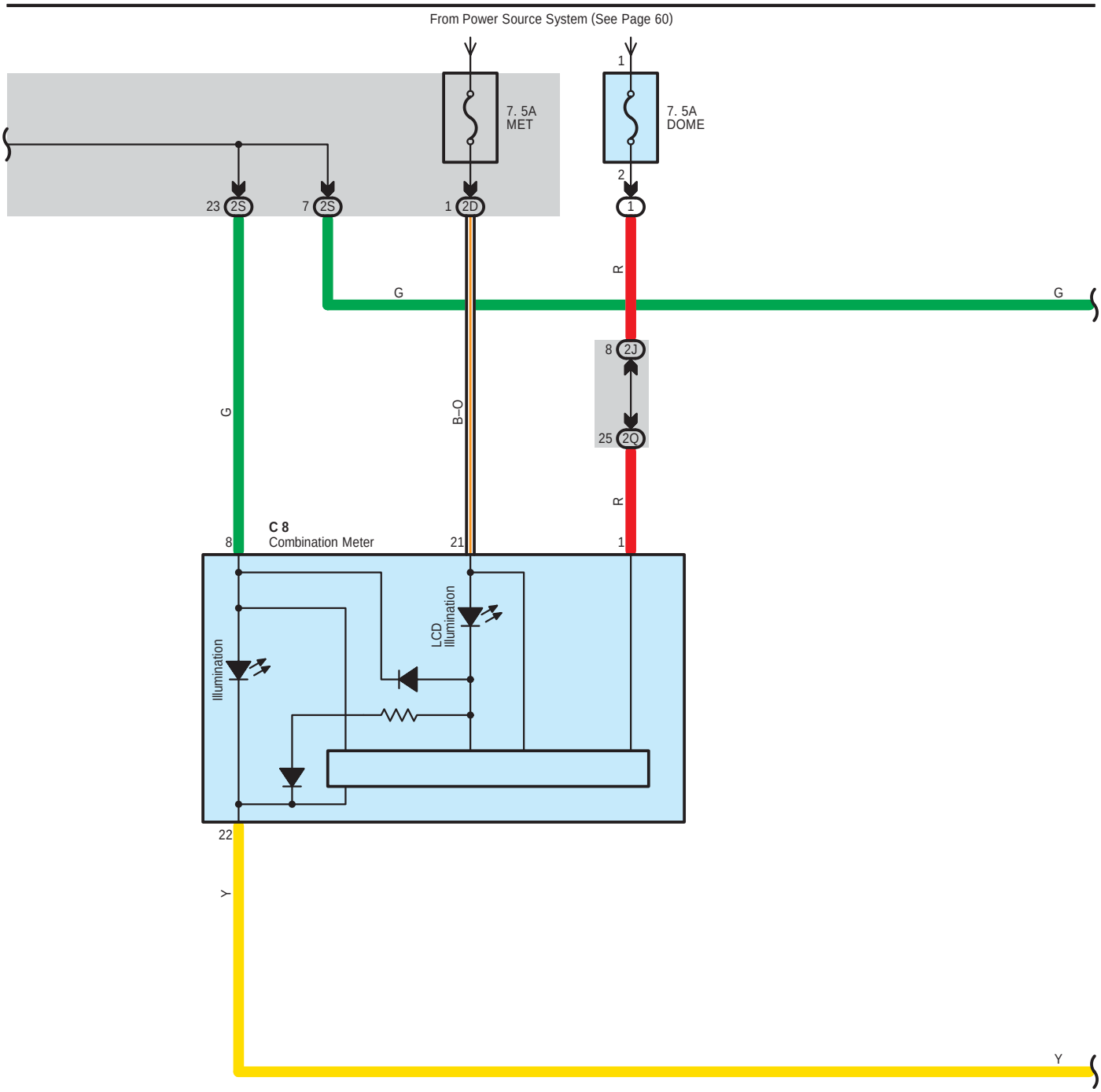

cardiagn.com

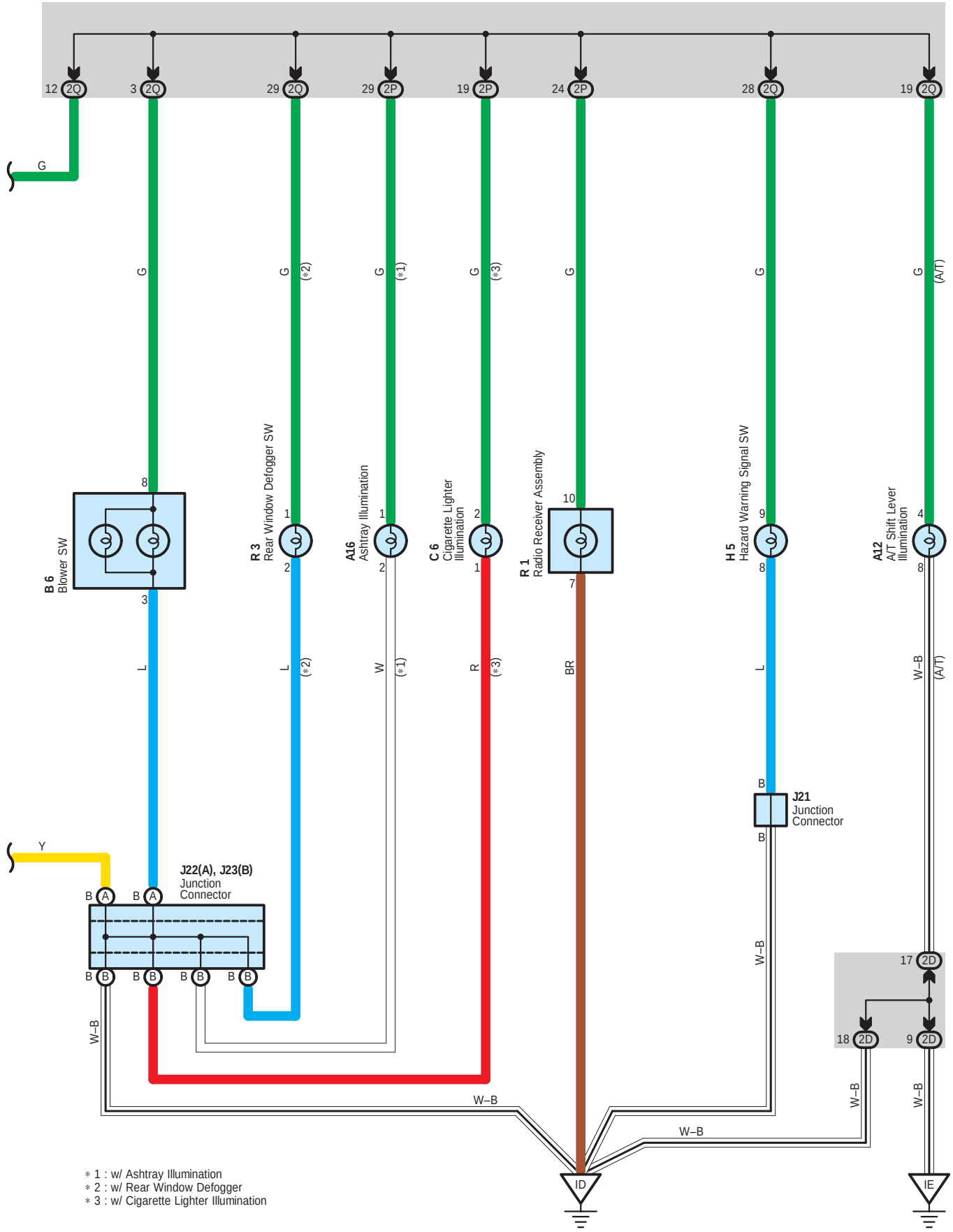

cardiagn.com

Service Hints

C10 Combination SW

5–8 : Continuity with the light control SW at HEAD or TAIL position

: Parts Location

Code	See Page	Code	See Page	Code	See Page
A12	38	J15	38	R1	39
A16	38	J21	38	R3	39
B6	38	J22 A	38	R4	41 (Double Cab)
C2	36	J23 B	38		43 (Extra Cab)
C3	36	L1	40 (Double Cab)		45 (Single Cab)
C6	38		42 (Extra Cab)	R5	41 (Double Cab)
C8	38		44 (Single Cab)		43 (Extra Cab)
C10	38	L2	40 (Double Cab)		45 (Single Cab)
H5	38		42 (Extra Cab)		
J1	37		44 (Single Cab)		

: Relay Blocks

Code	See Page	Relay Blocks (Relay Block Location)
1	22	Engine Room R/B (Engine Compartment Left)

: Junction Block and Wire Harness Connector

Code	See Page	Junction Block and Wire Harness (Connector Location)
2C	28	Instrument Panel Wire and Driver Side J/B (Instrument Panel Brace RH)
2D		
2J	28	Engine Room Main Wire and Driver Side J/B (Instrument Panel Brace RH)
2K	28	Floor Wire and Driver Side J/B (Instrument Panel Brace RH)
2L	28	Engine Room Main Wire and Driver Side J/B (Instrument Panel Brace RH)
2M		
2P	29	Instrument Panel Wire and Driver Side J/B (Instrument Panel Brace RH)
2Q		
2R		
2S		

: Connector Joining Wire Harness and Wire Harness

Code	See Page	Joining Wire Harness and Wire Harness (Connector Location)
BA1	52 (Double Cab)	Frame Wire and Floor Wire (Under the Front Seat LH)
	54 (Extra Cab)	
	56 (Single Cab)	

: Ground Points

Code	See Page	Ground Points Location
EA	46	Right Side of the Fender Apron
EB	46	Left Side of the Fender Apron
ID	48	Instrument Panel Reinforcement Center
IE	48	Instrument Panel Reinforcement RH
IG	48	Cowl Side Panel LH

: Splice Points

Code	See Page	Wire Harness with Splice Points	Code	See Page	Wire Harness with Splice Points
I2	50	Engine Room Main Wire	B3	54 (Extra Cab)	Frame Wire
B3	52 (Double Cab)	Frame Wire		56 (Single Cab)	

cardiagn.com

Turn Signal and Hazard Warning Light

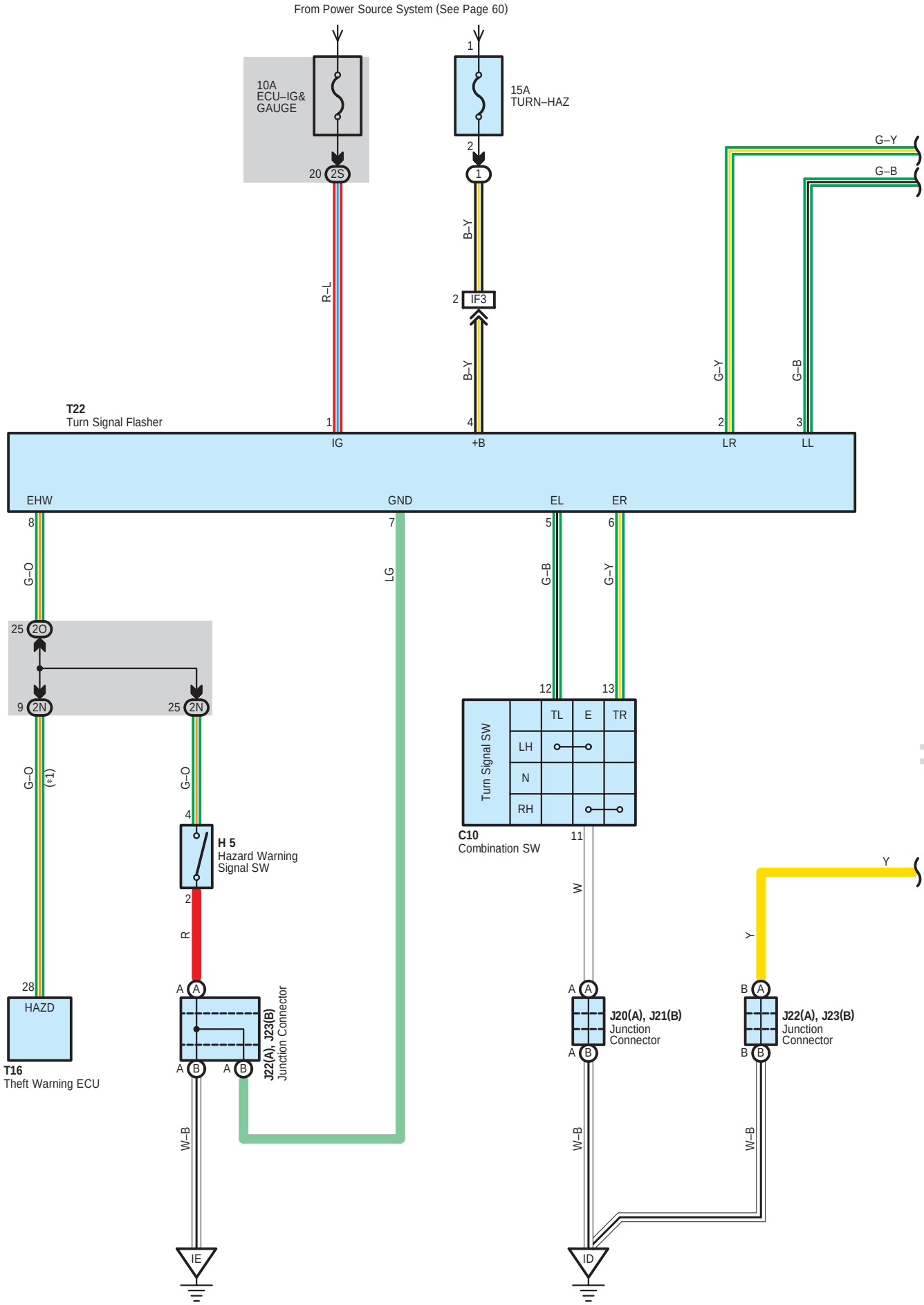

cardiagn.com

∗ 1 : w/ Theft Deterrent System

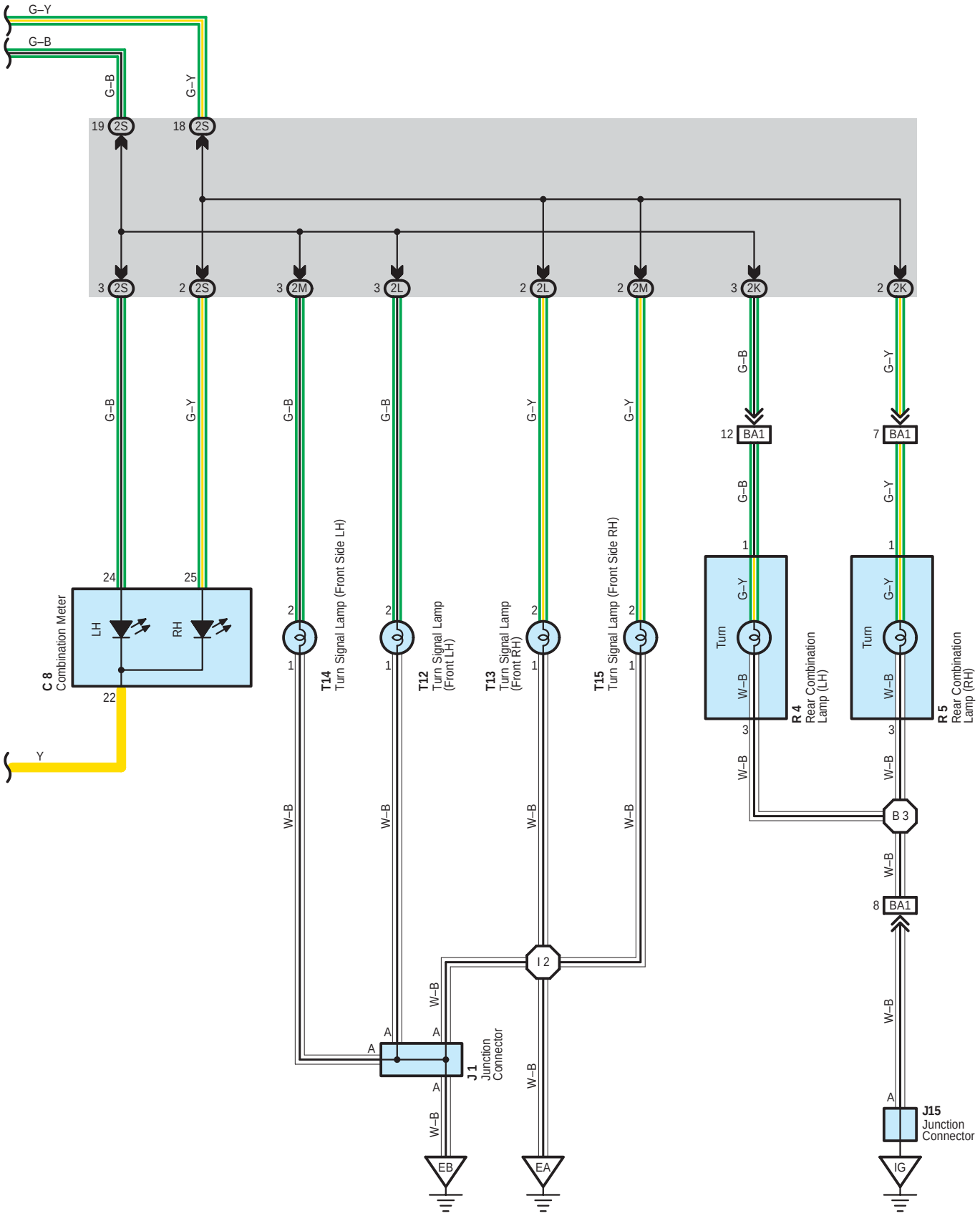

cardiagn.com

Turn Signal and Hazard Warning Light

Service Hints

T22 Turn Signal Flasher

1–Ground : Approx. 12 volts with the ignition SW at ON position
4–Ground : Always approx. 12 volts
2, 3–Ground : Changes from approx. 12 to 0 volts with the ignition SW at ON position and the turn signal SW at LEFT or RIGHT position or the hazard warning signal SW at ON position
5–Ground : Continuity with the turn signal SW at LEFT position
6–Ground : Continuity with the turn signal SW at RIGHT position
8–Ground : Continuity with the hazard warning signal SW at ON position
7–Ground : Always continuity

: Parts Location

Code		See Page	Code		See Page	Code	See Page
C8		38	J22	A	38	R5	45 (Single Cab)
C10		38	J23	B	38	T12	37
H5		38	R4		41 (Double Cab)	T13	37
J1		37			43 (Extra Cab)	T14	37
J15		38			45 (Single Cab)	T15	37
J20	A	38	R5		41 (Double Cab)	T16	39
J21	B	38			43 (Extra Cab)	T22	39

: Relay Blocks

Code	See Page	Relay Blocks (Relay Block Location)
1	22	Engine Room R/B (Engine Compartment Left)

: Junction Block and Wire Harness Connector

Code	See Page	Junction Block and Wire Harness (Connector Location)
2K	28	Floor Wire and Driver Side J/B (Instrument Panel Brace RH)
2L	28	Engine Room Main Wire and Driver Side J/B (Instrument Panel Brace RH)
2M		
2N	29	Instrument Panel Wire and Driver Side J/B (Instrument Panel Brace RH)
2O		
2S		

: Connector Joining Wire Harness and Wire Harness

Code	See Page	Joining Wire Harness and Wire Harness (Connector Location)
IF3	50	Engine Room Main Wire and Instrument Panel Wire (Behind the Driver Side J/B)
BA1	52 (Double Cab)	Frame Wire and Floor Wire (Under the Front Seat LH)
	54 (Extra Cab)	
	56 (Single Cab)	

: Ground Points

Code	See Page	Ground Points Location
EA	46	Right Side of the Fender Apron
EB	46	Left Side of the Fender Apron
ID	48	Instrument Panel Reinforcement Center
IE	48	Instrument Panel Reinforcement RH
IG	48	Cowl Side Panel LH

: Splice Points

Code	See Page	Wire Harness with Splice Points	Code	See Page	Wire Harness with Splice Points
I2	50	Engine Wire	B3	54 (Extra Cab)	Frame Wire
B3	52 (Double Cab)	Frame Wire		56 (Single Cab)	

cardiagn.com

cardiagn.com

Stop Light

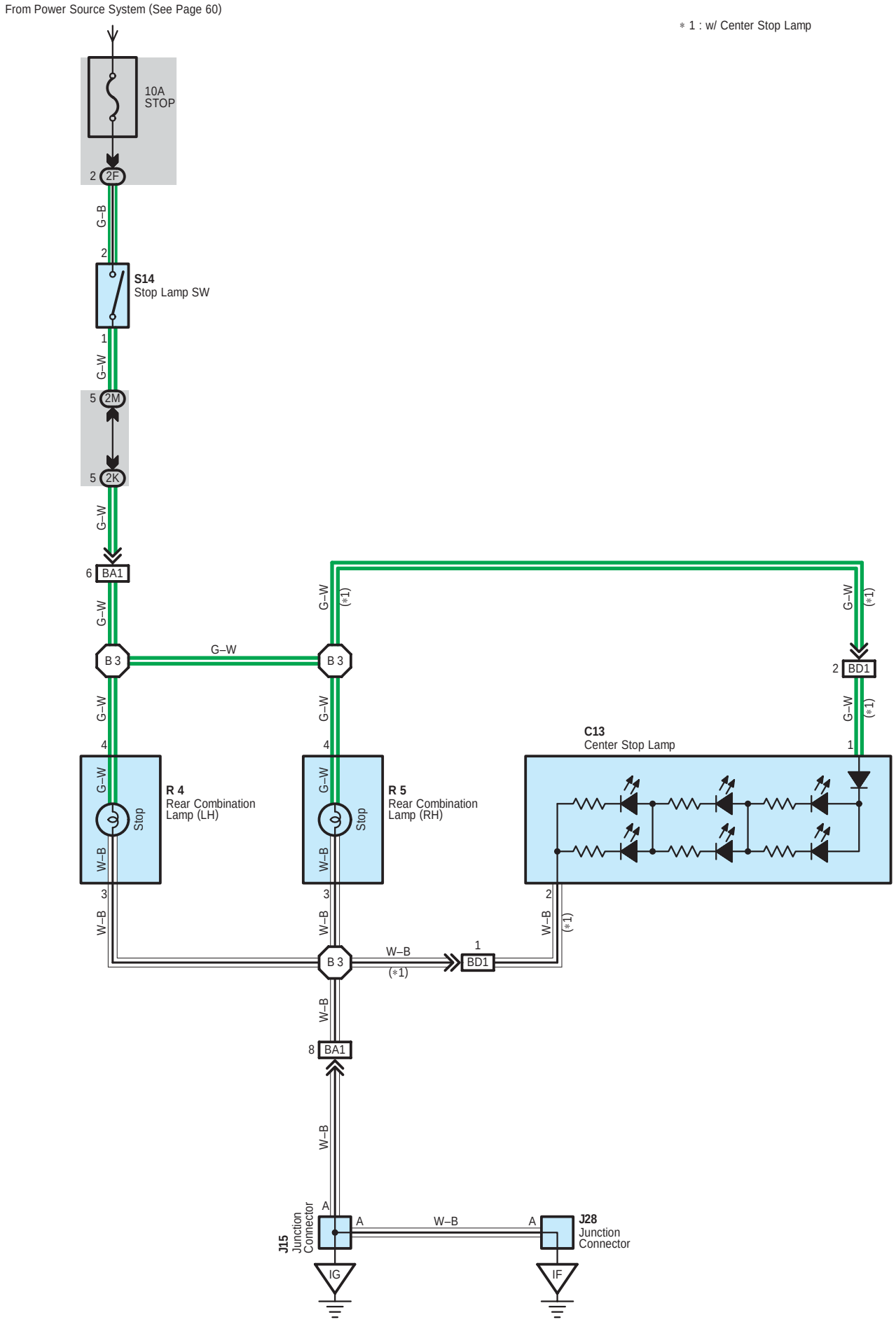

cardiagn.com

Service Hints

S14 Stop Lamp SW

2–1 : Closed with the brake pedal depressed

: Parts Location

Code	See Page	Code	See Page	Code	See Page
C13	40 (Double Cab)	J28	38	R5	41 (Double Cab)
	42 (Extra Cab)	R4	41 (Double Cab)		43 (Extra Cab)
	44 (Single Cab)		43 (Extra Cab)		45 (Single Cab)
J15	38		45 (Single Cab)	S14	39

: Junction Block and Wire Harness Connector

Code	See Page	Junction Block and Wire Harness (Connector Location)
2F	28	Engine Room Main Wire and Driver Side J/B (Instrument Panel Brace RH)
2K	28	Floor Wire and Driver Side J/B (Instrument Panel Brace RH)
2M	28	Engine Room Main Wire and Driver Side J/B (Instrument Panel Brace RH)

: Connector Joining Wire Harness and Wire Harness

Code	See Page	Joining Wire Harness and Wire Harness (Connector Location)
BA1	52 (Double Cab)	Frame Wire and Floor Wire (Under the Front Seat LH)
	54 (Extra Cab)	
	56 (Single Cab)	
BD1	52 (Double Cab)	Frame No.2 Wire and Frame Wire (Under the Back Panel LH)
	54 (Extra Cab)	
	56 (Single Cab)	

: Ground Points

Code	See Page	Ground Points Location
IF	48	Cowl Side Panel RH
IG	48	Cowl Side Panel LH

: Splice Points

Code	See Page	Wire Harness with Splice Points	Code	See Page	Wire Harness with Splice Points
B3	52 (Double Cab)	Frame Wire	B3	56 (Single Cab)	Frame Wire
	54 (Extra Cab)				

cardiagn.com

Back–Up Light

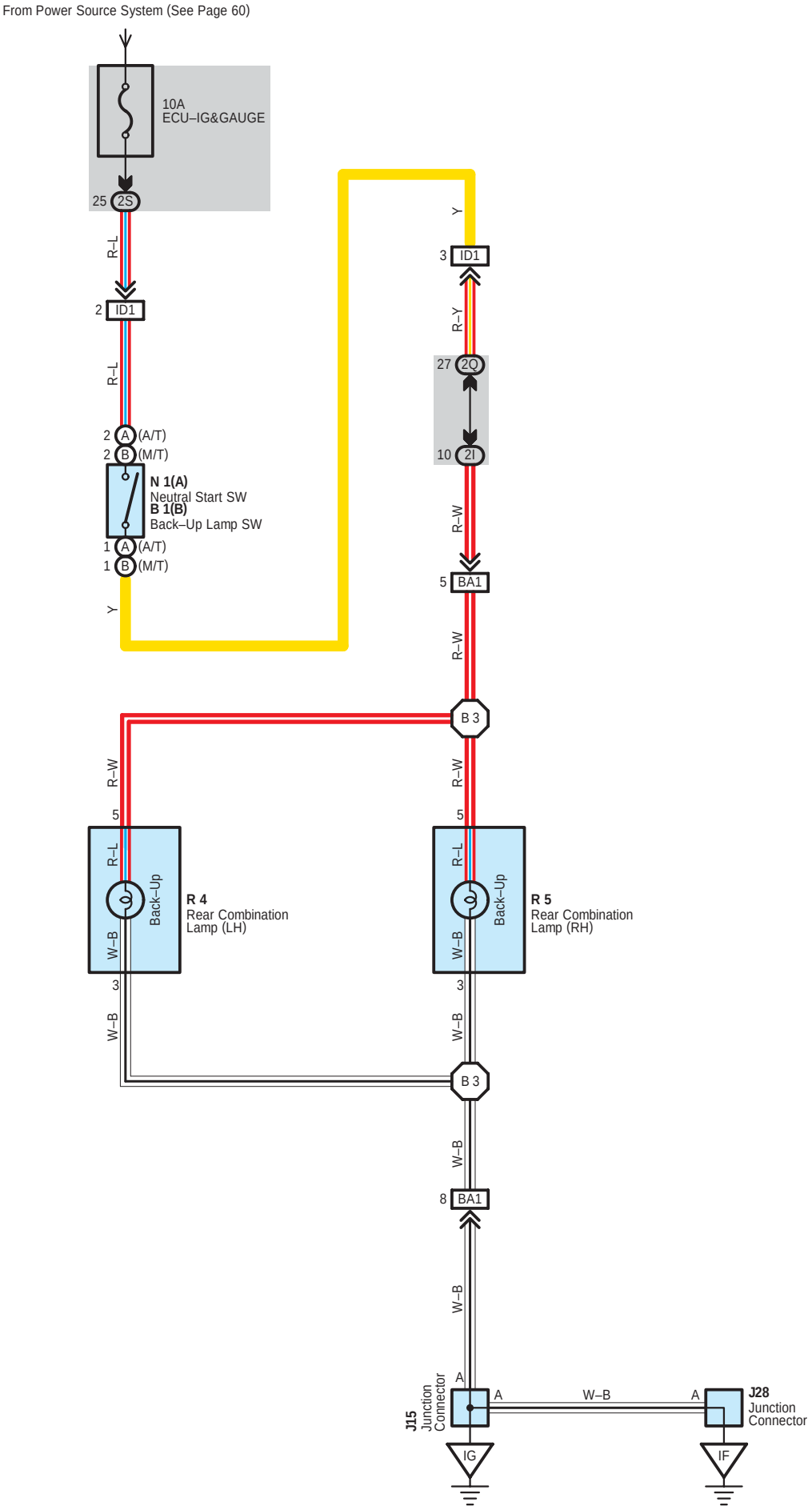

cardiagn.com

Service Hints

B1 (B) Back–Up Light SW (M/T)
(B) 2–(B) 1 : Closed with the shift lever in R position

N1 (A) Neutral Start SW (A/T)
(A) 2–(A) 1 : Closed with the shift lever in R position

: Parts Location

Code		See Page	Code	See Page	Code	See Page
B1	B	36	R4	41 (Double Cab)	R5	43 (Extra Cab)
J15		38		43 (Extra Cab)		45 (Single Cab)
J28		38		45 (Single Cab)		
N1	A	37	R5	41 (Double Cab)		

: Junction Block and Wire Harness Connector

Code	See Page	Junction Block and Wire Harness (Connector Location)
2I	28	Floor Wire and Driver Side J/B (Instrument Panel Brace RH)
2Q	29	Instrument Panel Wire and Driver Side J/B (Instrument Panel Brace RH)
2S		

: Connector Joining Wire Harness and Wire Harness

Code	See Page	Joining Wire Harness and Wire Harness (Connector Location)
ID1	48	Engine Wire and Instrument Panel Wire (Behind the Glove Box)
BA1	52 (Double Cab)	Frame Wire and Floor Wire (Under the Front Seat LH)
	54 (Extra Cab)	
	56 (Single Cab)	

: Ground Points

Code	See Page	Ground Points Location
IF	48	Cowl Side Panel RH
IG	48	Cowl Side Panel LH

: Splice Points

Code	See Page	Wire Harness with Splice Points	Code	See Page	Wire Harness with Splice Points
B3	52 (Double Cab)	Frame Wire	B3	56 (Single Cab)	Frame Wire
	54 (Extra Cab)				

cardiagn.com

Interior Light

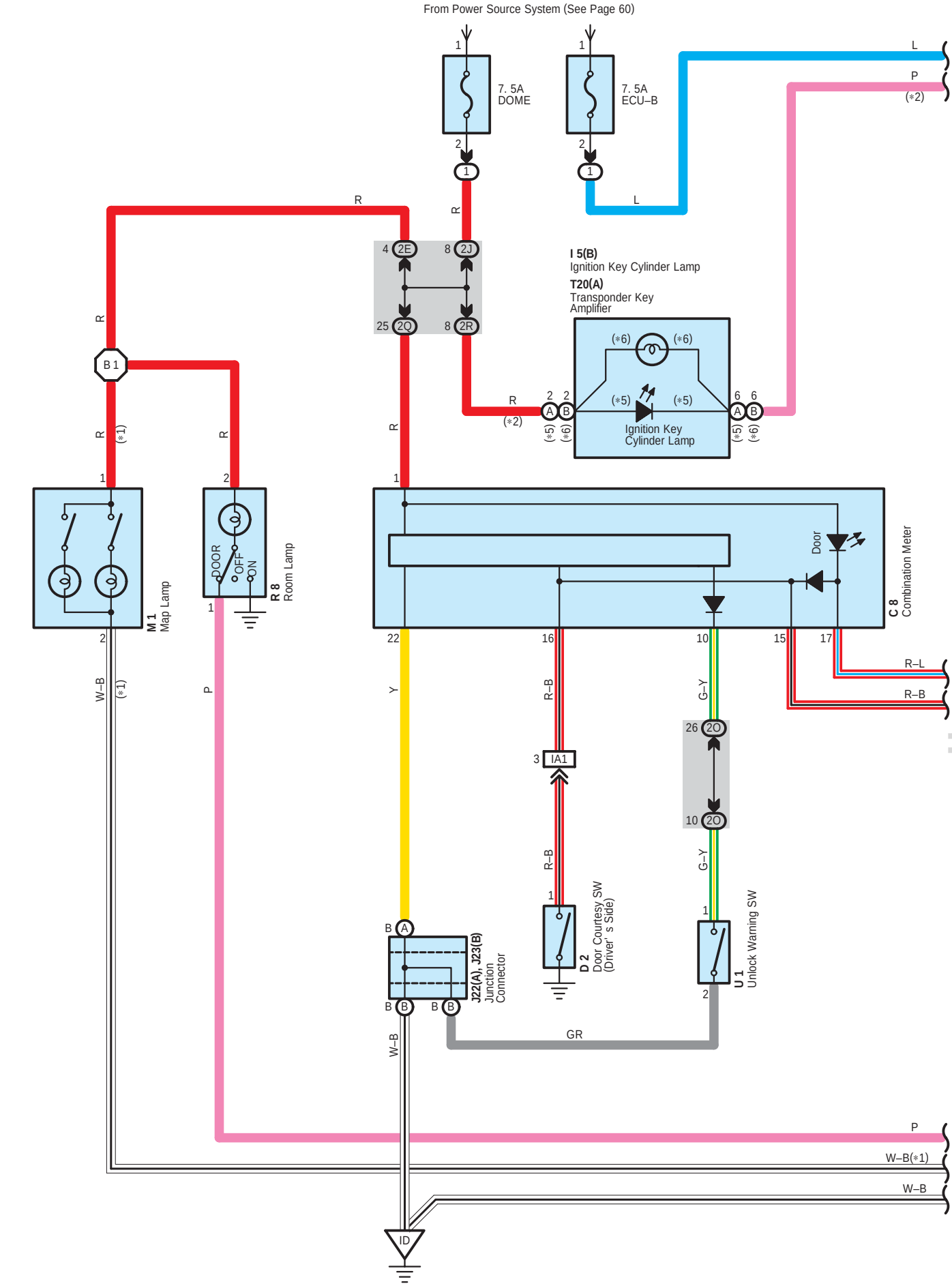

cardiagn.com

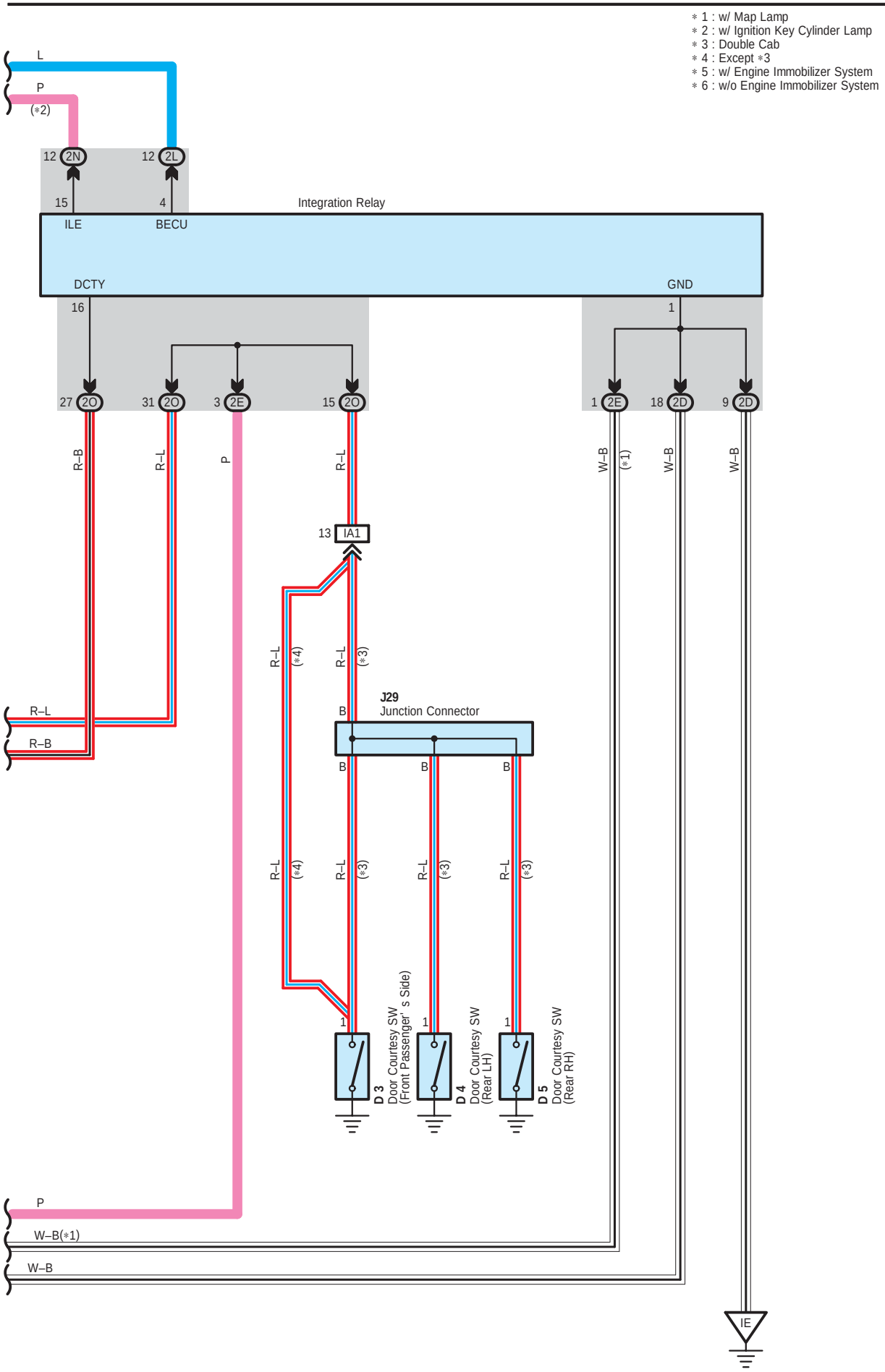

cardiagn.com

Interior Light

Service Hints

D2, D3, D4, D5 Door Courtesy SW (Driver's Side), (Front Passenger's Side), (Rear LH), (Rear RH)
1–Ground : Continuity with each of the door open

: Parts Location

Code	See Page	Code	See Page	Code	See Page
C8	38	D4	40 (Double Cab)	M1	42 (Extra Cab)
D2	40 (Double Cab)	D5	40 (Double Cab)	R8	41 (Double Cab)
	42 (Extra Cab)	I5 B	38		43 (Extra Cab)
	44 (Single Cab)	J22 A	38		45 (Single Cab)
D3	40 (Double Cab)	J23 B	38	T20 A	39
	42 (Extra Cab)	J29	38	U1	39
	44 (Single Cab)	M1	40 (Double Cab)		

: Relay Blocks

Code	See Page	Relay Blocks (Relay Block Location)
1	22	Engine Room R/B (Engine Compartment Left)

: Junction Block and Wire Harness Connector

Code	See Page	Junction Block and Wire Harness (Connector Location)
2D	28	Instrument Panel Wire and Driver Side J/B (Instrument Panel Brace RH)
2E		
2J	28	Engine Room Main Wire and Driver Side J/B (Instrument Panel Brace RH)
2L		
2N	29	Instrument Panel Wire and Driver Side J/B (Instrument Panel Brace RH)
2O		
2Q		
2R		

: Connector Joining Wire Harness and Wire Harness

Code	See Page	Joining Wire Harness and Wire Harness (Connector Location)
IA1	48	Instrument Panel Wire and Floor Wire (Left Kick Panel)

: Ground Points

Code	See Page	Ground Points Location
ID	48	Instrument Panel Reinforcement Center
IE	48	Instrument Panel Reinforcement LH

: Splice Points

Code	See Page	Wire Harness with Splice Points	Code	See Page	Wire Harness with Splice Points
B1	52 (Double Cab)	Roof Wire	B1	54 (Extra Cab)	Roof Wire

cardiagn.com

cardiagn.com

Key Reminder and Light Reminder

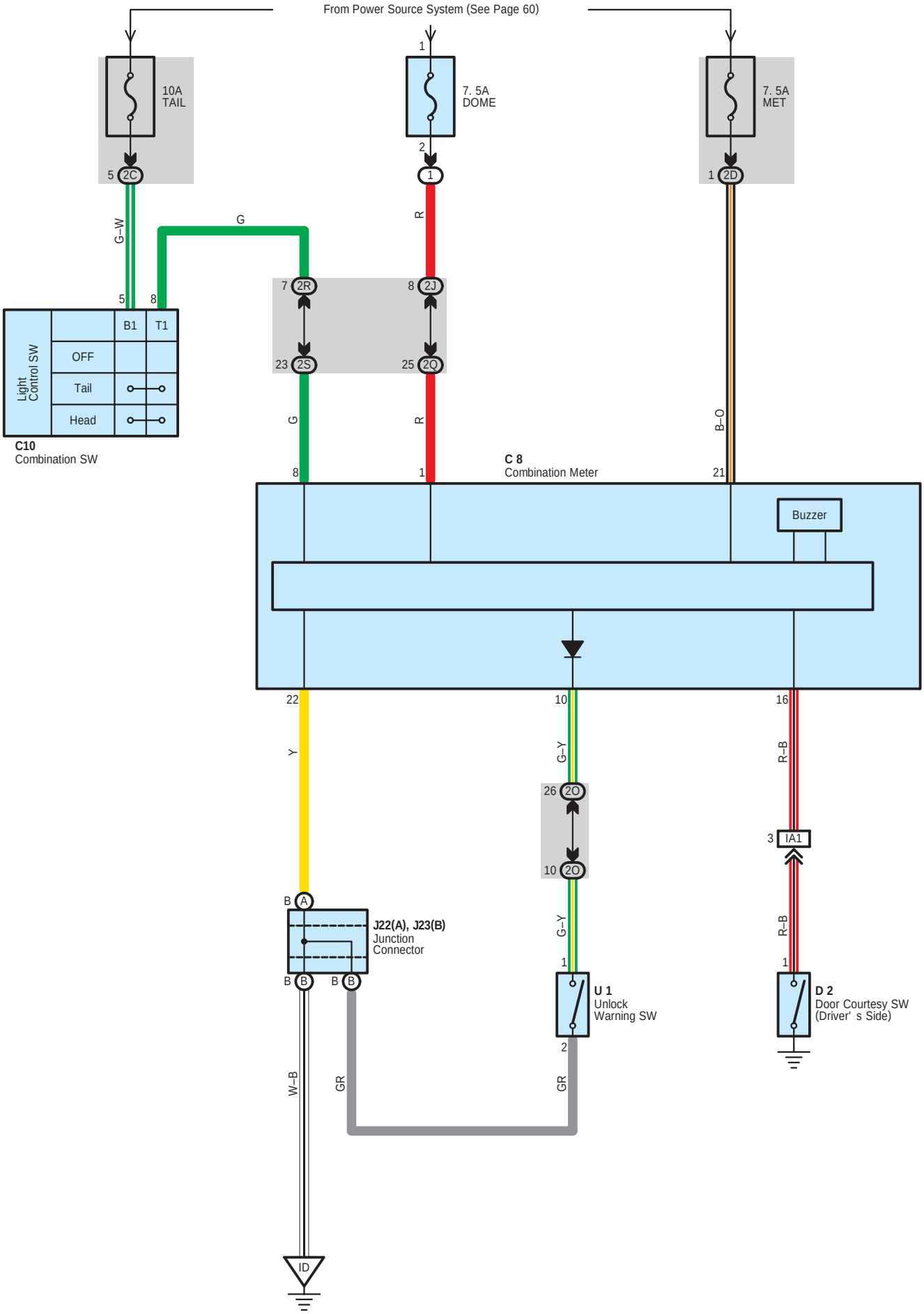

cardiagn.com

System Outline

The current is applied at all times to TERMINAL 1 of the combination meter through the DOME fuse.
When the ignition SW is turned to ON position, the current flows to TERMINAL 21 of the combination meter through the MET fuse. When the light control SW is turned to TAIL or HEAD position, current is applied to TERMINAL 8 of the combination meter through the TAIL fuse.

1. Key Reminder System

When the driver door is opened with the ignition SW off and ignition key remaining in the key cylinder (Unlock warning SW on), a signal is input from the unlock warning SW to TERMINAL 10 of the combination meter, and from the door courtesy SW (Driver's side) to TERMINAL 16 of the combination meter. As a result, the buzzer in the combination meter goes on and warns the driver that the key is remaining in the key cylinder.

2. Light Reminder System

When the light control SW is in TAIL or HEAD position, the ignition SW turned to OFF from ON position, ignition key is not in the key cylinder and the driver's door opened (Door courtesy SW on), the current flows to TERMINAL 21 of the combination meter stops. As a result, the combination meter is activated and current flows from TERMINAL 1 of the combination meter, the buzzer in the combination meter goes on to remind the light is lighting up.

Service Hints

C8 Combination Meter

21–Ground : Approx. 12 volts with the ignition SW at ON position
8–Ground : Approx. 12 volts with the light control SW at TAIL or HEAD position
16–Ground : Continuity with the driver's door open
22–Ground : Always continuity

D2 Door Courtesy SW (Driver's Side)

1–Ground : Closed with the driver's door open

U1 Unlock Warning SW

1–2 : Closed with the ignition key in cylinder

○ : Parts Location

Code	See Page	Code	See Page	Code	See Page
C8	38	D2	42 (Extra Cab)	J23 B	38
C10	38		44 (Single Cab)	U1	39
D2	40 (Double Cab)	J22 A	38		

⬭ : Relay Blocks

Code	See Page	Relay Blocks (Relay Block Location)
1	22	Engine Room R/B (Engine Compartment Left)

⬭ : Junction Block and Wire Harness Connector

Code	See Page	Junction Block and Wire Harness (Connector Location)
2C	28	Instrument Panel Wire and Driver Side J/B (Instrument Panel Brace RH)
2D		
2J	28	Engine Room Main Wire and Driver Side J/B (Instrument Panel Brace RH)
2O	29	Instrument Panel Wire and Driver Side J/B (Instrument Panel Brace RH)
2Q		
2R		
2S		

▭ : Connector Joining Wire Harness and Wire Harness

Code	See Page	Joining Wire Harness and Wire Harness (Connector Location)
IA1	48	Instrument Panel Wire and Floor Wire (Left Kick Panel)

▽ : Ground Points

Code	See Page	Ground Points Location
ID	48	Instrument Panel Reinforcement Center

cardiagn.com

Seat Belt Warning

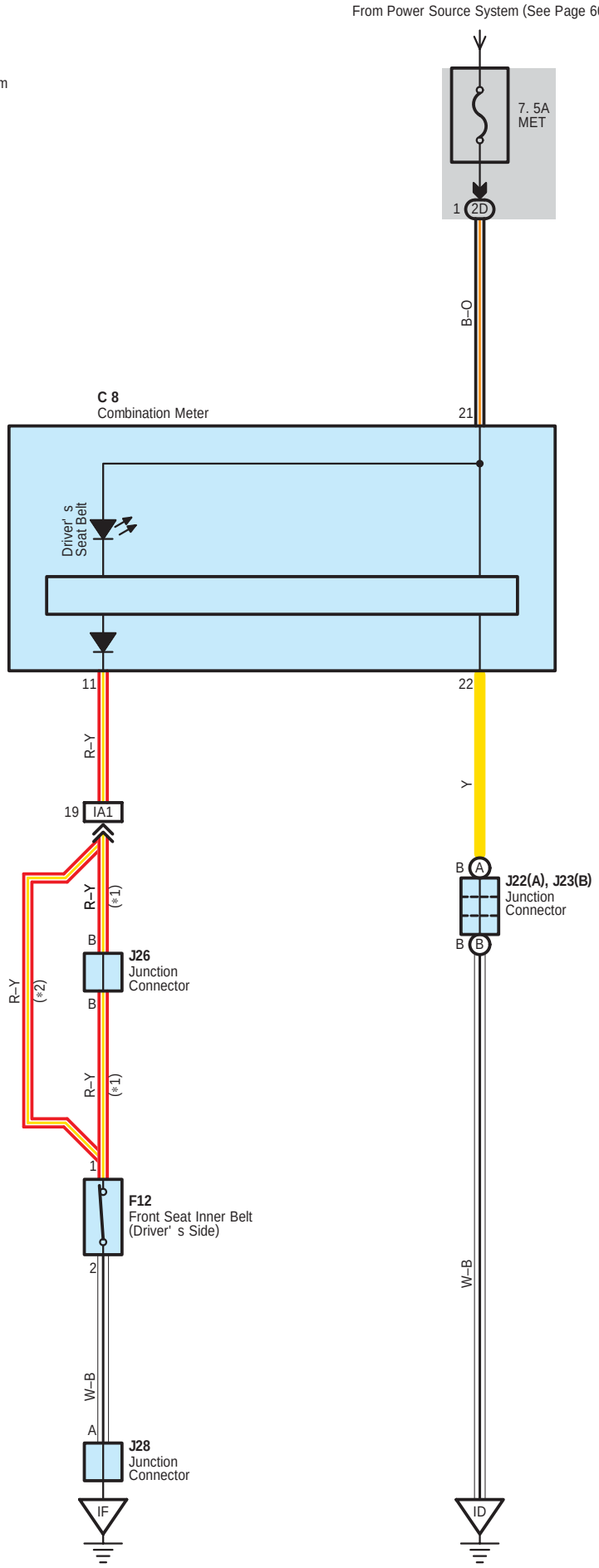

cardiagn.com

System Outline

When the ignition SW is turned to ON position, the current from the MET fuse flows to TERMINAL 21 of the combination meter.

Seat Belt Warning System

When the ignition SW turned on, a signal is input to the combination meter. To determine whether the driver has fastened the seat belt, a signal is input from the front seat inner belt (Driver's side) to TERMINAL 11 of the combination meter. When the seat belt is not fastened, the driver's seat belt warning light in the combination meter blinks.

Service Hints

F12 Front Seat Inner Belt (Driver's Side)

1–2 : Open with the driver's seat belt in use

C8 Combination Meter

21–Ground : Approx. 12 volts with the ignition SW at ON position
22–Ground : Always continuity

: Parts Location

Code	See Page	Code		See Page	Code	See Page
C8	38	F12		44 (Single Cab)	J26	38
F12	40 (Double Cab)	J22	A	38	J28	38
	42 (Extra Cab)	J23	B	38		

: Junction Block and Wire Harness Connector

Code	See Page	Junction Block and Wire Harness (Connector Location)
2D	28	Instrument Panel Wire and Driver Side J/B (Instrument Panel Brace RH)

: Connector Joining Wire Harness and Wire Harness

Code	See Page	Joining Wire Harness and Wire Harness (Connector Location)
IA1	48	Instrument Panel Wire and Floor Wire (Left Kick Panel)

: Ground Points

Code	See Page	Ground Points Location
ID	48	Instrument Panel Reinforcement Center
IF	48	Cowl Side Panel RH

cardiagn.com

From Power Source System (See Page 60)

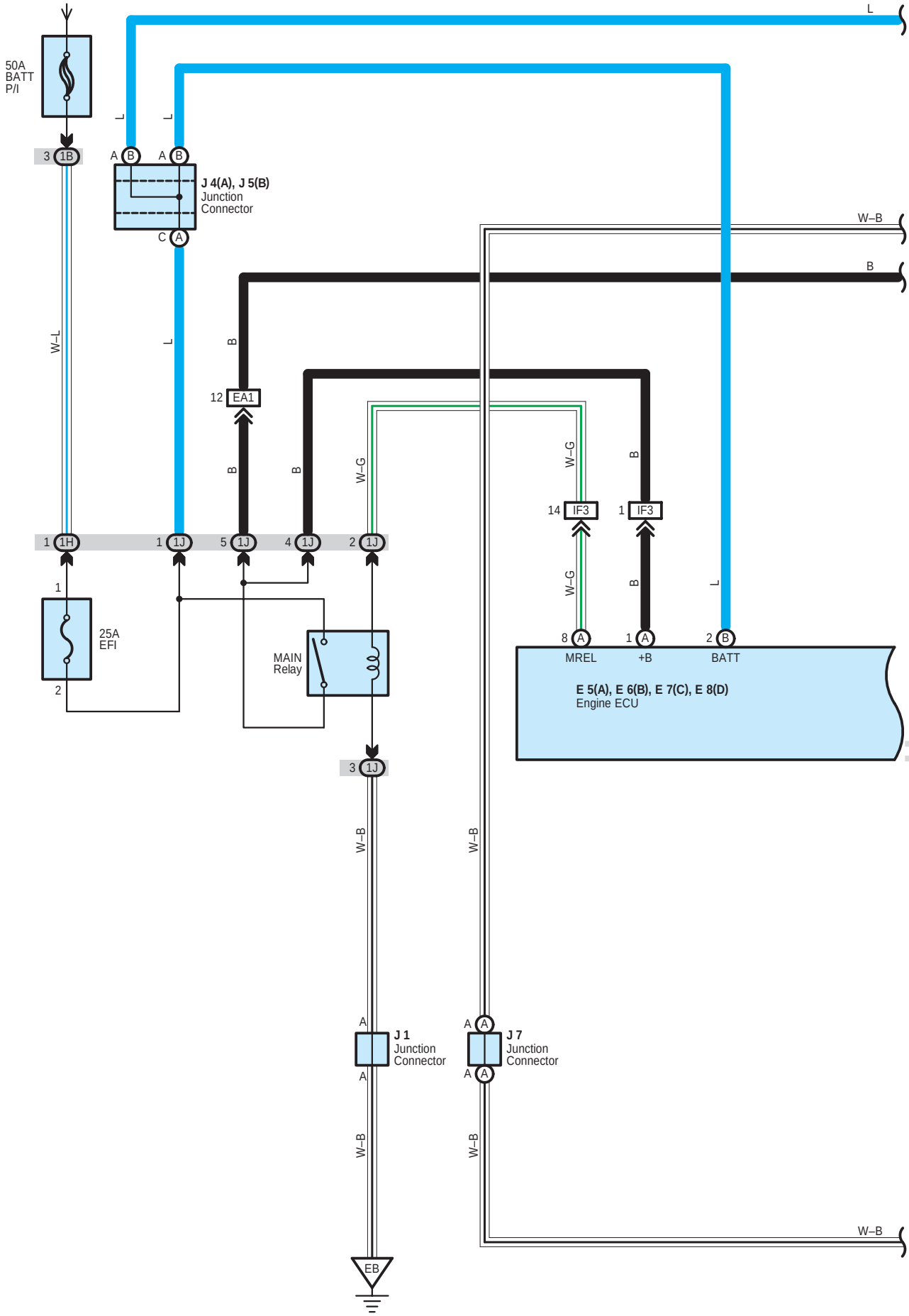

cardiagn.com

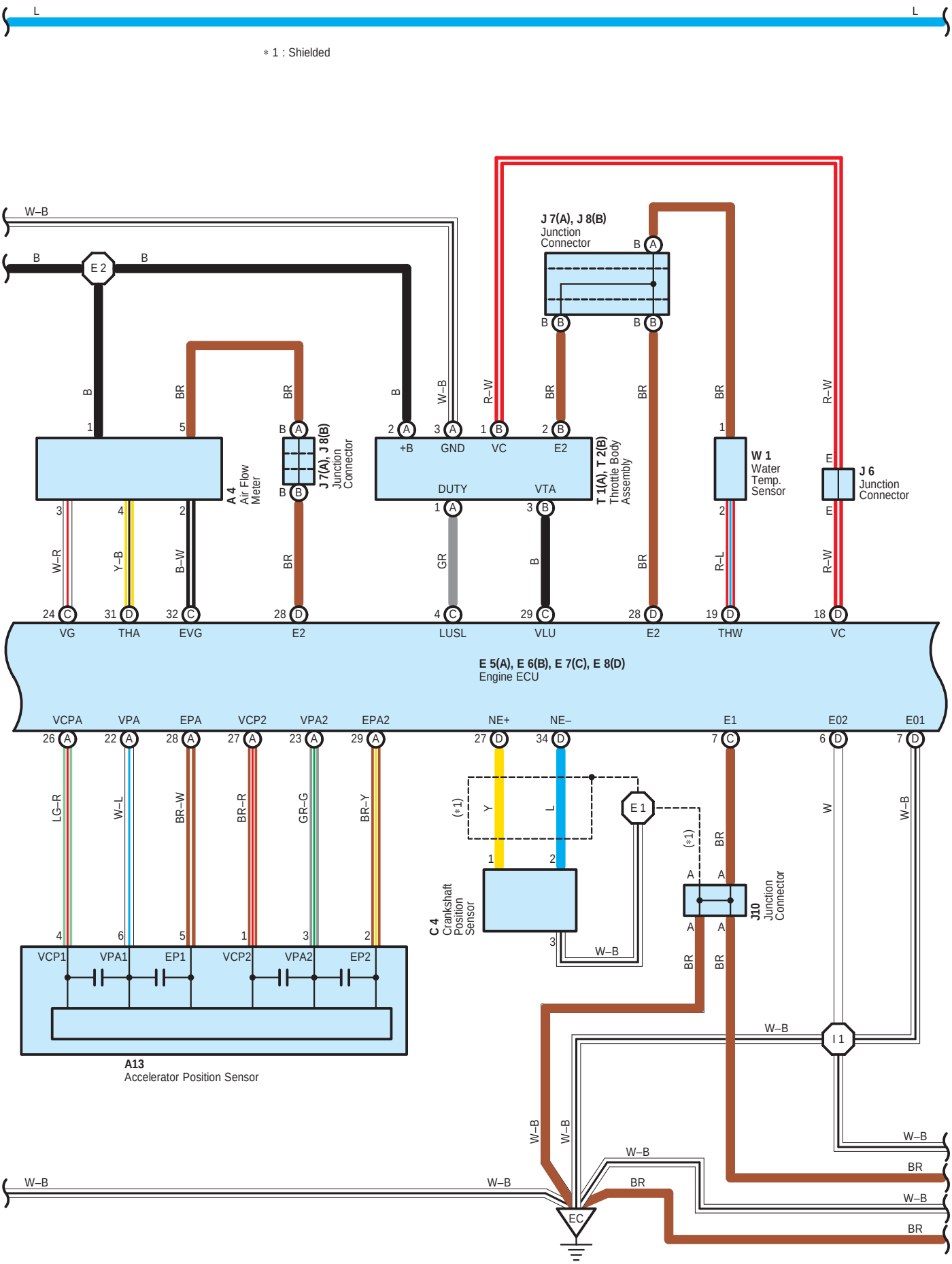

cardiagn.com

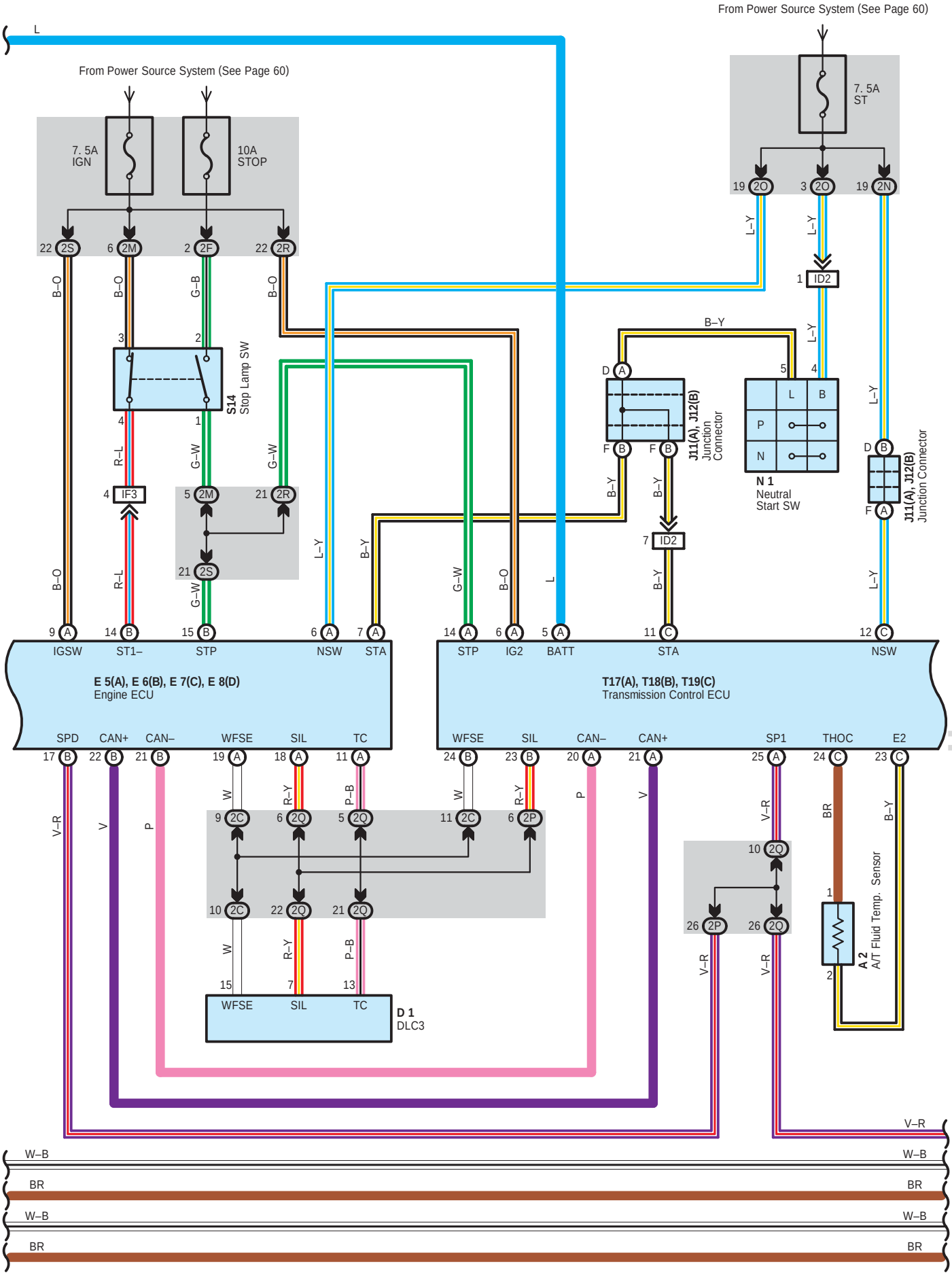

cardiagn.com

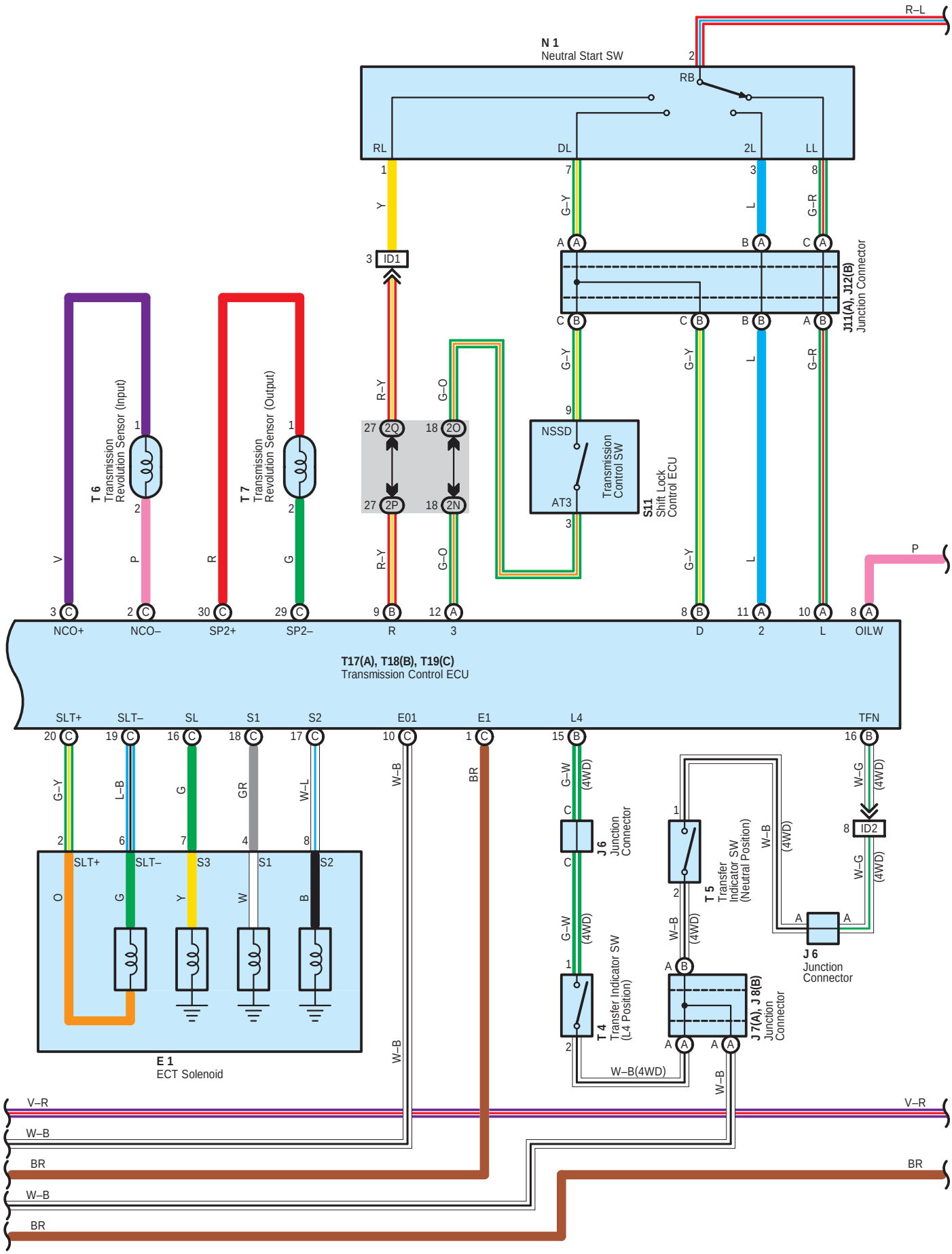

cardiagn.com

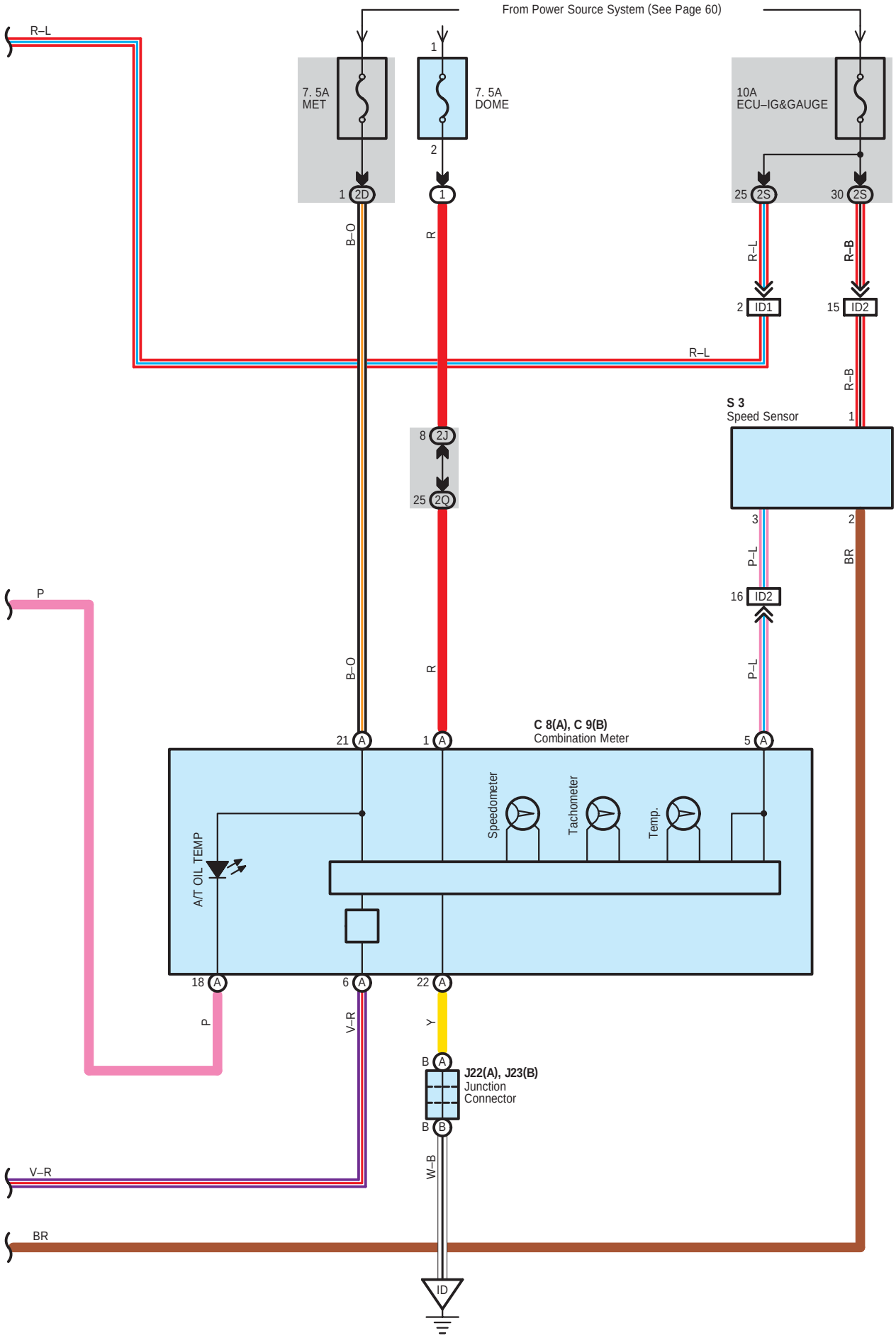

cardiagn.com

System Outline

Previous automatic transmissions have selected each gear shift using mechanically controlled throttle hydraulic pressure, governor hydraulic pressure and lock–up hydraulic pressure. The electronically controlled transmission, however, electrically controls the line pressure, throttle pressure, lock–up pressure and accumulator pressure etc. through the solenoid valve. The electronically controlled transmission is a system which precisely controls gear shift timing and lock–up timing in response to the vehicle's driving conditions and the engine condition detected by various sensors. It makes smooth driving possible by shift selection for each gear which is the most appropriate to the driving conditions at that time, and by preventing downing, squat and gear shift shock when starting off.

1. Lock–Up Operation

When the transmission control ECU decides based on each signal that the lock–up condition has been met, the current flows through TERMINAL SL of the transmission control ECU to TERMINAL 7 of the ECT solenoid to GROUND, causing lock–up operation.

2. Stop Lamp SW Circuit

If the brake pedal is depressed (Stop lamp SW on) when driving in lock–up condition, a signal is input to TERMINAL STP of the transmission control ECU. The transmission control ECU operates and cuts the current to the solenoid to release lock–up.

Service Hints

T17 (A), T19 (C) Transmission Control ECU

(A) 6–Ground : Approx. 12 volts with the ignition SW at ON position
(A) 5–Ground : Always approx. 12 volts
(C) 12–Ground : Approx. 12 volts with the ignition SW at ST position
(A) 14–Ground : Approx. 12 volts with the brake pedal depressed
(C) 1, (C) 10–Ground : Always continuity

N1 Neutral Start SW

2–1 : Closed with the shift lever in R position
2–7 : Closed with the shift lever in D position
2–3 : Closed with the shift lever in 2 position
2–8 : Closed with the shift lever in L position

: Parts Location

Code		See Page	Code		See Page	Code		See Page
A2		36	J4	A	38	S14		39
A4		36	J5	B	38	T1		37
A13		38	J6		38	T2		37
C4		36	J7	A	38	T4		37
C8	A	38	J8	B	38	T5		37
C9	B	38	J10		38	T6		37
D1		38	J11	A	38	T7		37
E1		36	J12	B	38	T17	A	39
E5	A	38	J22	A	38	T18	B	39
E6	B	38	J23	B	38	T19	C	39
E7	C	38	N1		37	W1		37
E8	D	38	S3		37			
J1		37	S11		39			

: Relay Blocks

Code	See Page	Relay Blocks (Relay Block Location)
1	22	Engine Room R/B (Engine Compartment Left)

cardiagn.com

: **Junction Block and Wire Harness Connector**

Code	See Page	Junction Block and Wire Harness (Connector Location)
1B	23	Engine Room Main Wire and Engine Room J/B (Engine Compartment Left)
1H	24	
1J		
2C	28	Instrument Panel Wire and Driver Side J/B (Instrument Panel Brace RH)
2D		
2F	28	Engine Room Main Wire and Driver Side J/B (Instrument Panel Brace RH)
2J		
2M		
2N	29	Instrument Panel Wire and Driver Side J/B (Instrument Panel Brace RH)
2O		
2P		
2Q		
2R		
2S		

: **Connector Joining Wire Harness and Wire Harness**

Code	See Page	Joining Wire Harness and Wire Harness (Connector Location)
EA1	46	Engine Wire and Engine Room Main Wire (Inside of Engine Room R/B and Engine Room J/B)
ID1	48	Engine Wire and Instrument Panel Wire (Behind the Glove Box)
ID2		
IF3	50	Engine Room Main Wire and Instrument Panel Wire (Behind the Driver Side J/B)

: **Ground Points**

Code	See Page	Ground Points Location
EB	46	Left Side of the Fender Apron
EC	46	Rear Side of the Cylinder Block
ID	48	Instrument Panel Reinforcement Center

: **Splice Points**

Code	See Page	Wire Harness with Splice Points	Code	See Page	Wire Harness with Splice Points
E1	46	Engine Wire	I1	50	Engine Wire
E2					

cardiagn.com

cardiagn.com

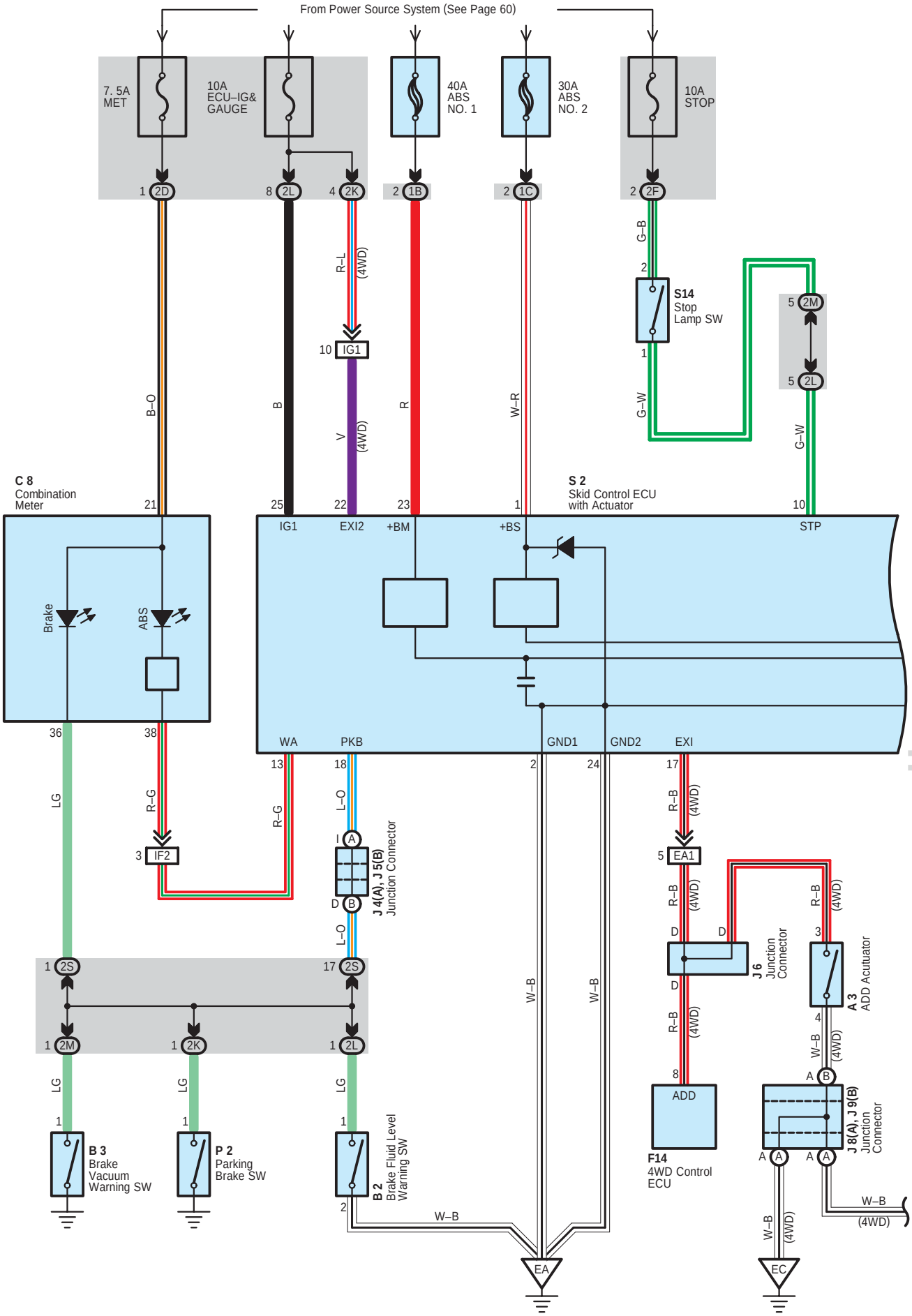

cardiagn.com

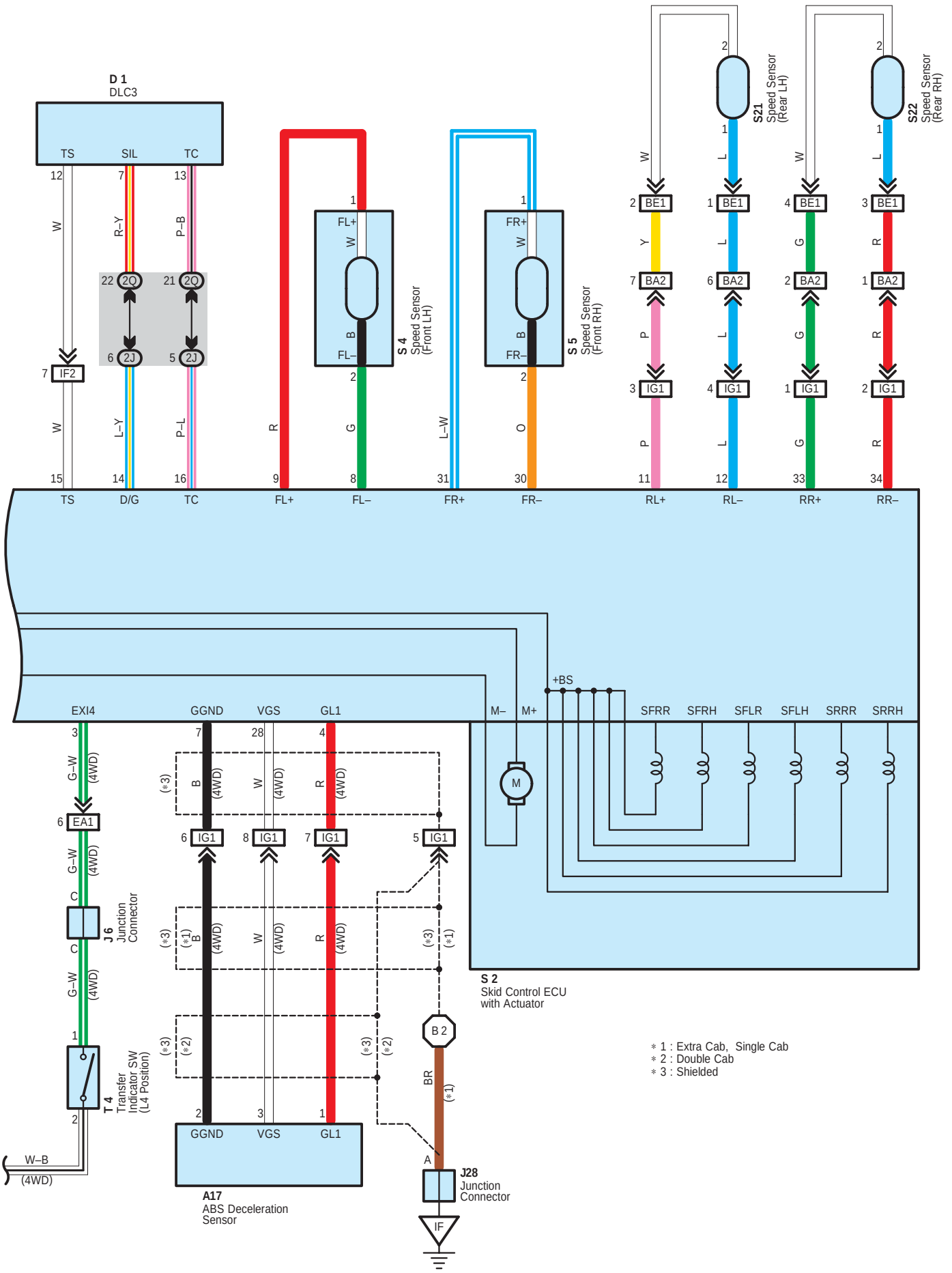

cardiagn.com

System Outline

This system controls the respective brake fluid pressures acting on the brake cylinders of the right front wheel, left front wheel, and rear wheels when the brakes are applied in a panic stop so that the wheels do not lock.
This results in improved directional stability and steerability during panic braking.

1. Input Signal

(1) Speed sensor signal
The speed of the wheels is detected and input to TERMINALS FL+, FR+, RL+ and RR+ of the skid control ECU with actuator.

(2) Stop lamp SW signal
A signal is input to TERMINAL STP of the skid control ECU with actuator when the brake pedal is depressed.

2. System Operation

During sudden braking, the skid control ECU with actuator which has signals input from each sensor lets the hydraulic pressure acting on each wheel cylinder escape to the reservoir.
The pump inside the skid control ECU with actuator is also operating at this time and it returns the brake fluid from the reservoir to the master cylinder, thus preventing locking of vehicle wheels.
If the skid control ECU with actuator judges that the hydraulic pressure acting on the wheel cylinder is insufficient, the current acting on the solenoid is controlled and the hydraulic pressure is increased.
Holding of the hydraulic pressure is also controlled by the ECU, by the same method as above, by repeated pressure reduction. Holding and increase are repeated to maintain vehicle stability and to improve steerability during sudden braking.

Service Hints

S4, S5 Speed Sensor (Front LH), (Front RH)
1–2 : 0.9–1.3 kΩ (25˚C, 77˚F)

S2 Skid Control ECU with Actuator
25–Ground : Approx. 12 volts with the ignition SW at ON position
10–Ground : Approx. 12 volts with the stop lamp SW on (Brake pedal depressed)
2, 24–Ground : Always continuity
1, 23–Ground : Always approx. 12 volts

S14 Stop Lamp SW
2–1 : Closed with the brake pedal depressed

: Parts Location

Code	See Page	Code		See Page	Code	See Page
A3	36	J4	A	38	S5	37
A17	40 (Double Cab)	J5	B	38	S14	39
	42 (Extra Cab)	J6		38	S21	41 (Double Cab)
	44 (Single Cab)	J8	A	38		43 (Extra Cab)
B2	36	J9	B	38		45 (Single Cab)
B3	36	J28		38	S22	41 (Double Cab)
C8	38	P2		39		43 (Extra Cab)
D1	38	S2		37		45 (Single Cab)
F14	39	S4		37	T4	37

: Junction Block and Wire Harness Connector

Code	See Page	Junction Block and Wire Harness (Connector Location)
1B	23	Engine Room Main Wire and Engine Room J/B (Engine Compartment Left)
1C		
2D	28	Instrument Panel Wire and Driver Side J/B (Instrument Panel Brace RH)
2F	28	Engine Room Main Wire and Driver Side J/B (Instrument Panel Brace RH)
2J		
2K	28	Floor Wire and Driver Side J/B (Instrument Panel Brace RH)
2L	28	Engine Room Main Wire and Driver Side J/B (Instrument Panel Brace RH)
2M		
2Q	29	Instrument Panel Wire and Driver Side J/B (Instrument Panel Brace RH)
2S		

cardiagn.com

: **Connector Joining Wire Harness and Wire Harness**

Code	See Page	Joining Wire Harness and Wire Harness (Connector Location)
EA1	46	Engine Wire and Engine Room Main Wire (Inside of Engine Room R/B and Engine Room J/B)
IF2	50	Engine Room Main Wire and Instrument Panel Wire (Behind the Driver Side J/B)
IG1	50	Engine Room Main Wire and Floor Wire (Near the Driver Side J/B)
BA2	52 (Double Cab)	Frame Wire and Floor Wire (Under the Front Seat LH)
	54 (Extra Cab)	
	56 (Single Cab)	
BE1	52 (Double Cab)	Frame Wire and Skid Control Sensor Wire (Rear of the Rear Differential)
	54 (Extra Cab)	
	56 (Single Cab)	

: **Ground Points**

Code	See Page	Ground Points Location
EA	46	Right Side of the Fender Apron
EC	46	Rear Side of the Cylinder Block
IF	48	Cowl Side Panel RH

: **Splice Points**

Code	See Page	Wire Harness with Splice Points	Code	See Page	Wire Harness with Splice Points
B2	54 (Extra Cab)	Frame Wire	B2	56 (Single Cab)	Frame Wire

cardiagn.com

cardiagn.com

NOTICE: When inspecting or repairing the SRS, perform service in accordance with the following precautionary instructions and the procedure, and precautions in the Repair Manual applicable for the model year.

- Malfunction symptoms of the SRS are difficult to confirm, so the DTCs become the most important source of information when troubleshooting. When troubleshooting the SRS, always inspect the DTCs before disconnecting the battery.
- **Work must be started more than 90 seconds after the ignition SW is turned to the ”LOCK” position and the negative (–) terminal cable is disconnected from the battery.**
  (The SRS is equipped with a back–up power source so that if work is started within 90 seconds from disconnecting the negative (–) terminal cable of the battery, the SRS may deploy.)
- When the negative (–) terminal cable is disconnected from the battery, the memory of the clock and audio system will be cleared. So before starting work, make a record of the contents in the audio memory system. When work is finished, reset the audio systems as they were before and adjust the clock. Some vehicles have power tilt steering, power telescopic steering, power seat and power outside rear view mirror which are all equipped with memory function. However, it is not possible to make a record of these memory contents. So when the work is finished, it will be necessary to explain it to your customer, and ask the customer to adjust the features and reset the memory. To avoid erasing the memory in each system, never use a back–up power supply from outside the vehicle.
- Before repair, remove the airbag sensor if shocks are likely to be applied to the sensor during repair.
- Do not expose the following parts directly to hot air or flame;
- Even in cases of a minor collision where the SRS does not deploy, the following parts should be inspected;
- Never use SRS parts from another vehicle. When replacing parts, replace with new parts.
- For the purpose of reuse, never disassemble and repair the following parts.
- If the following parts have been dropped, or have cracks, dents and other defects in their case, bracket, and connector, replace with new one.
- Use a volt/ohmmeter with high impedance (10 kΩ/V minimum) for troubleshooting electrical circuits of the system.
- Information labels are attached to the periphery of the SRS components. Follow the instructions of the notice.
- After work on the SRS is completed, check the SRS warning light.
- If the vehicle is equipped with a mobile communication system, refer to the precaution in the IN section of the Repair Manual.

∗ Steering wheel pad ∗ Center airbag sensor assembly ∗ Front airbag sensor assembly

cardiagn.com

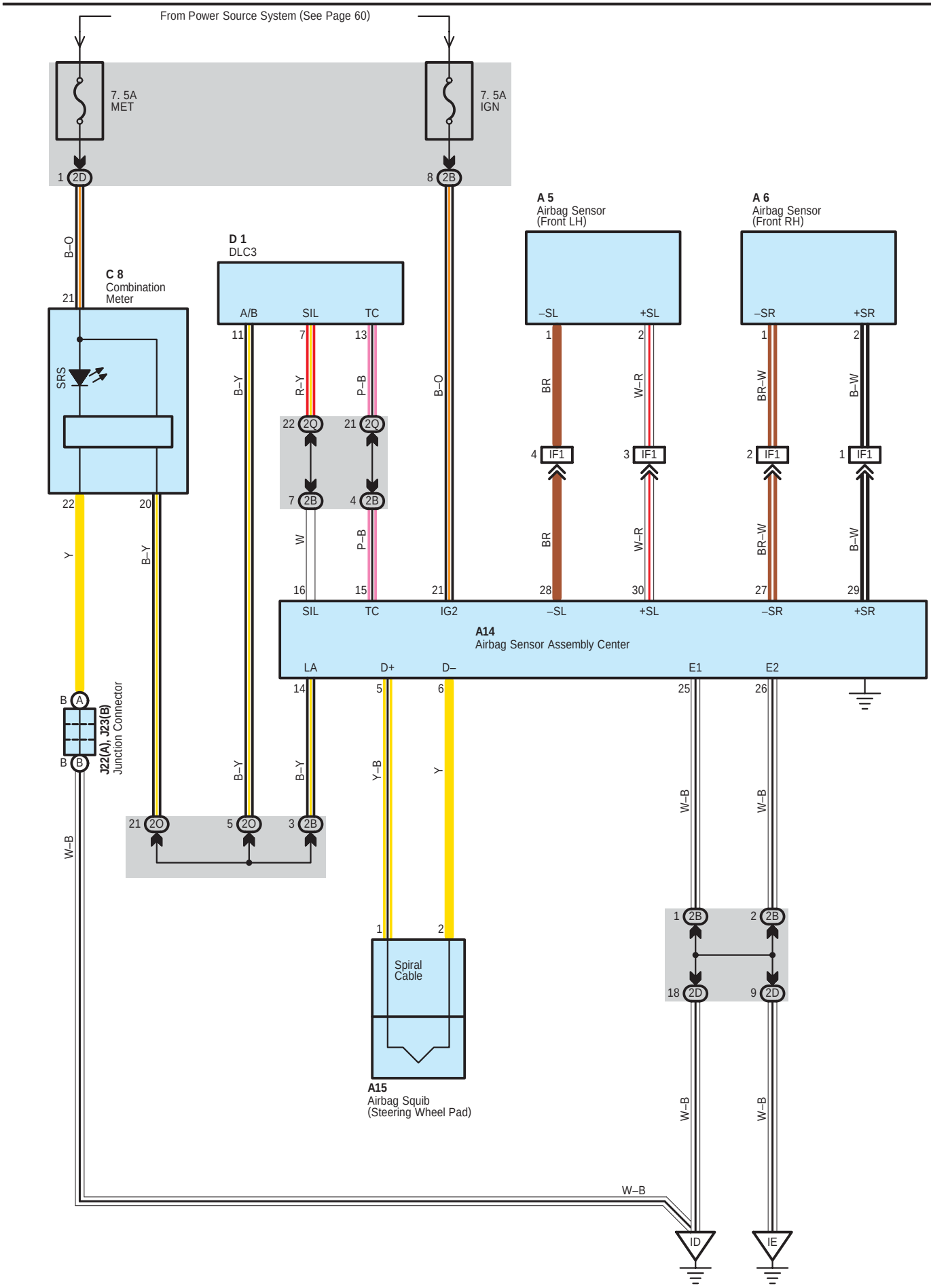

cardiagn.com

System Outline

The SRS is a driver protection device which has a supplemental role to the seat belts.
When the ignition SW is turned to ON, the current from the ignition SW flows to TERMINAL 21 of the airbag sensor assembly center.
If an accident occurs while driving, when the frontal impact exceeds a set level, the current from the ignition SW flows to TERMINAL 5 of the airbag sensor assembly center to the airbag squibs TERMINAL 6 of the airbag sensor assembly center to TERMINAL 25, 26 or BODY GROUND to GROUND, so that current flows to the airbag squibs and causes them to operate.
The airbag stored inside the steering wheel pad is instantaneously expanded to soften the shock to the driver.

○ : Parts Location

Code	See Page	Code	See Page	Code		See Page
A5	36	A15	38	J22	A	38
A6	36	C8	38	J23	B	38
A14	38	D1	38			

: Junction Block and Wire Harness Connector

Code	See Page	Junction Block and Wire Harness (Connector Location)
2B	28	Instrument Panel Wire and Driver Side J/B (Instrument Panel Brace RH)
2D		
2O	29	
2Q		

: Connector Joining Wire Harness and Wire Harness

Code	See Page	Joining Wire Harness and Wire Harness (Connector Location)
IF1	50	Engine Room Main Wire and Instrument Panel Wire (Behind the Driver Side J/B)

▽ : Ground Points

Code	See Page	Ground Points Location
ID	48	Instrument Panel Reinforcement Center
IE	48	Instrument Panel Reinforcement RH

cardiagn.com

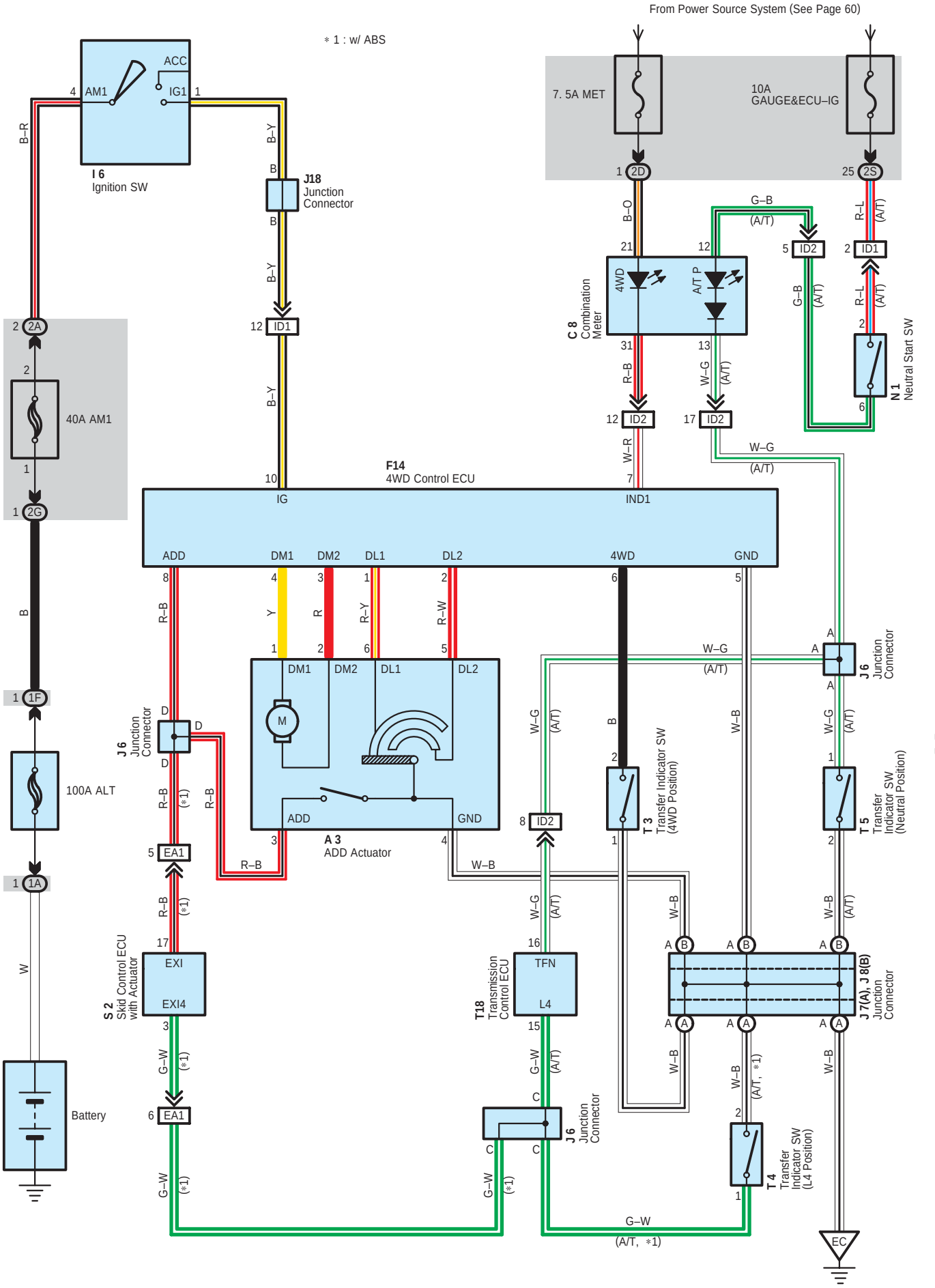

cardiagn.com

System Outline

Driving mode is switched to H2 or H4 or L4 when the driver operates the transfer shift lever. Transfer indicator SW (4WD position) is turned on when the transfer shift lever is shifted in 4WD (H4 or L4).

1. 2-4 Select System

(1) Shifting from H4 to H2
When the transfer shift lever is changed from H4 to H2 position, transfer indicator SW (4WD position) detects OFF signal to activate the ADD motor, which results in changing the transfer to 2WD (H2 position).
At this time, the transfer indicator SW (4WD position) are off.

(2) Shifting from H2 to H4
When the transfer shift lever is changed from H2 to H4 position, transfer indicator SW (4WD position) detects ON signal to activate the ADD motor, which results in changing the transfer to 4WD (H4 position) to light up 4WD indicator.

(3) Shifting from H4 to L4
When the transfer shift lever is changed from H4 to L4 position, the shift fork shaft moves to change the transfer to 4WD (L4 position), which results in turning ON transfer indicator SW (L4 position). ADD motor does not operate since it is only the lever operation.

(4) Shifting from L4 to H4
When the transfer shift lever is changed from L4 to H4 position, the shift fork shaft moves. When transfer indicator SW (L4 position) is turned OFF, the transfer changes to 4WD (H4 position). ADD motor does not operate since it is only the lever operation.

2. Other Control

When abnormality is found in the 4WD system, the driver is warned by 4WD indicator light's flashing.

Service Hints

F14 4WD Control ECU

10–Ground : Approx. 12 volts with the ignition SW at ON position
5–Ground : Always continuity

T3 Transfer Indicator SW (4WD Position)

2–1 : Closed with the transfer shift lever at H4 position

T4 Transnfer Indicator SW (L4 Position)

2–1 : Closed with the transfer shift lever at L4 position

○ : Parts Location

Code	See Page	Code		See Page	Code	See Page
A3	36	J7	A	38	T3	37
C8	38	J8	B	38	T4	37
F14	39	J18		38	T5	37
I6	38	N1		37	T18	39
J6	38	S2		37		

: Junction Block and Wire Harness Connector

Code	See Page	Junction Block and Wire Harness (Connector Location)
1A	23	Engine Room Main Wire and Engine Room J/B (Engine Compartment Left)
1F		
2A	28	Instrument Panel Wire and Driver Side J/B (Instrument Panel Brace RH)
2D		
2G	28	Engine Room Main Wire and Driver Side J/B (Instrument Panel Brace RH)
2S	29	Instrument Panel Wire and Driver Side J/B (Instrument Panel Brace RH)

: Connector Joining Wire Harness and Wire Harness

Code	See Page	Joining Wire Harness and Wire Harness (Connector Location)
EA1	46	Engine Wire and Engine Room Main Wire (Inside of Engine Room R/B and Engine Room J/B)
ID1	48	Engine Wire and Instrument Panel Wire (Behind the Glove Box)
ID2		

cardiagn.com

▽ : **Ground Points**

Code	See Page	Ground Points Location
EC	46	Rear Side of the Cylinder Block

cardiagn.com

cardiagn.com

Shift Lock

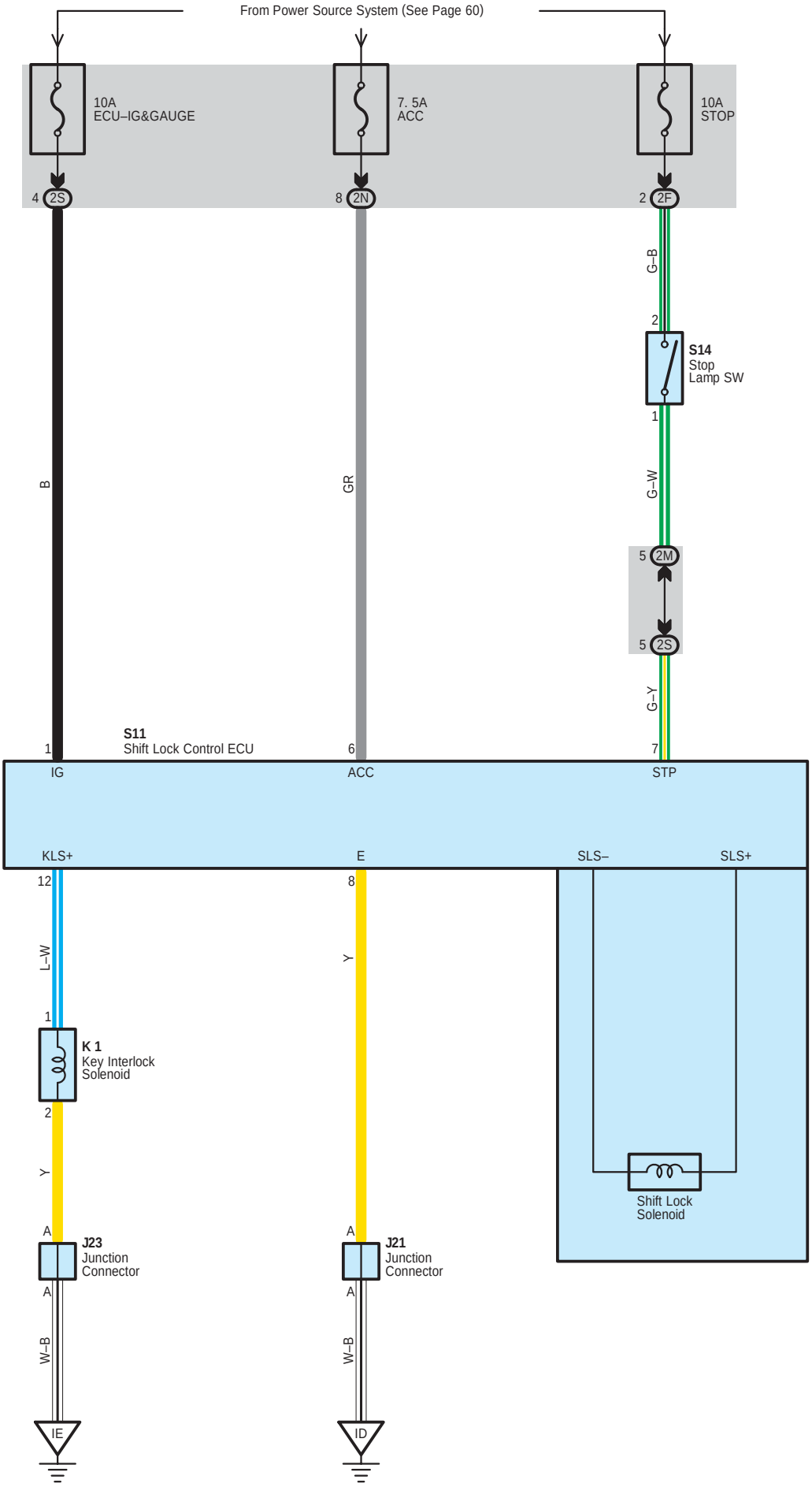

cardiagn.com

System Outline

When the ignition SW is turned to ACC position the current from the ACC fuse flows to TERMINAL 6 of the shift lock control ECU. When the ignition SW is turned to ON position, the current from the ECU–IG&GAUGE fuse flows to TERMINAL 1 of the shift lock control ECU.

1. Shift Lock Mechanism

If the brake pedal is depressed with the ignition SW set at ON (The stop lamp SW is on), the shift lock control ECU is activated, allowing the driver to change the shift lever to a position other than the P position.

2. Key Interlock Mechanism

With the ignition SW at ON or ACC position, when the shift lever is put in P position, the current flowing from TERMINAL 12 of the shift lock control ECU to key interlock solenoid is cut off. This causes the key interlock solenoid to turn off (Lock lever disengages from LOCK position) and the ignition key can be turned from ACC to LOCK position.

Service Hints

S11 Shift Lock Control ECU

6–Ground : Approx. 12 volts with the ignition SW at ACC or ON position
1–Ground : Approx. 12 volts with the ignition SW at ON position
7–Ground : Approx. 12 volts with the brake pedal depressed
8–Ground : Always continuity

S14 Stop Lamp SW

2–1 : Closed with the brake pedal depressed

○ : Parts Location

Code	See Page	Code	See Page	Code	See Page
J21	38	K1	39	S14	39
J23	38	S11	39		

▭ : Junction Block and Wire Harness Connector

Code	See Page	Junction Block and Wire Harness (Connector Location)
2F	28	Engine Room Main Wire and Driver Side J/B (Instrument Panel Brace RH)
2M		
2N	29	Instrument Panel Wire and Driver Side J/B (Instrument Panel Brace RH)
2S		

▽ : Ground Points

Code	See Page	Ground Points Location
ID	48	Instrument Panel Reinforcement Center
IE	48	Instrument Panel Reinforcement RH

cardiagn.com

Door Lock Control

∗ 1 : Double Cab
∗ 2 : Extra Cab

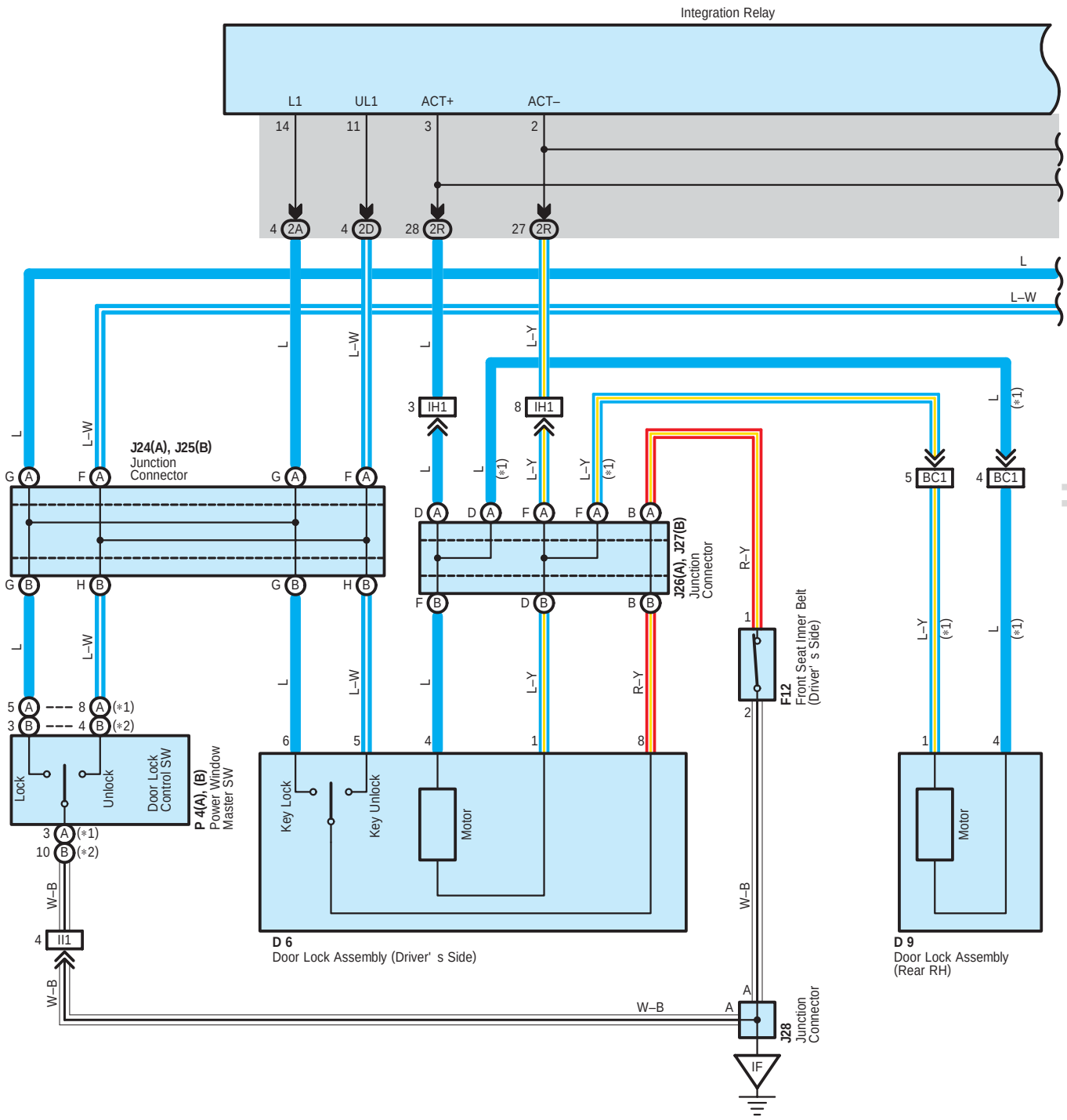

cardiagn.com

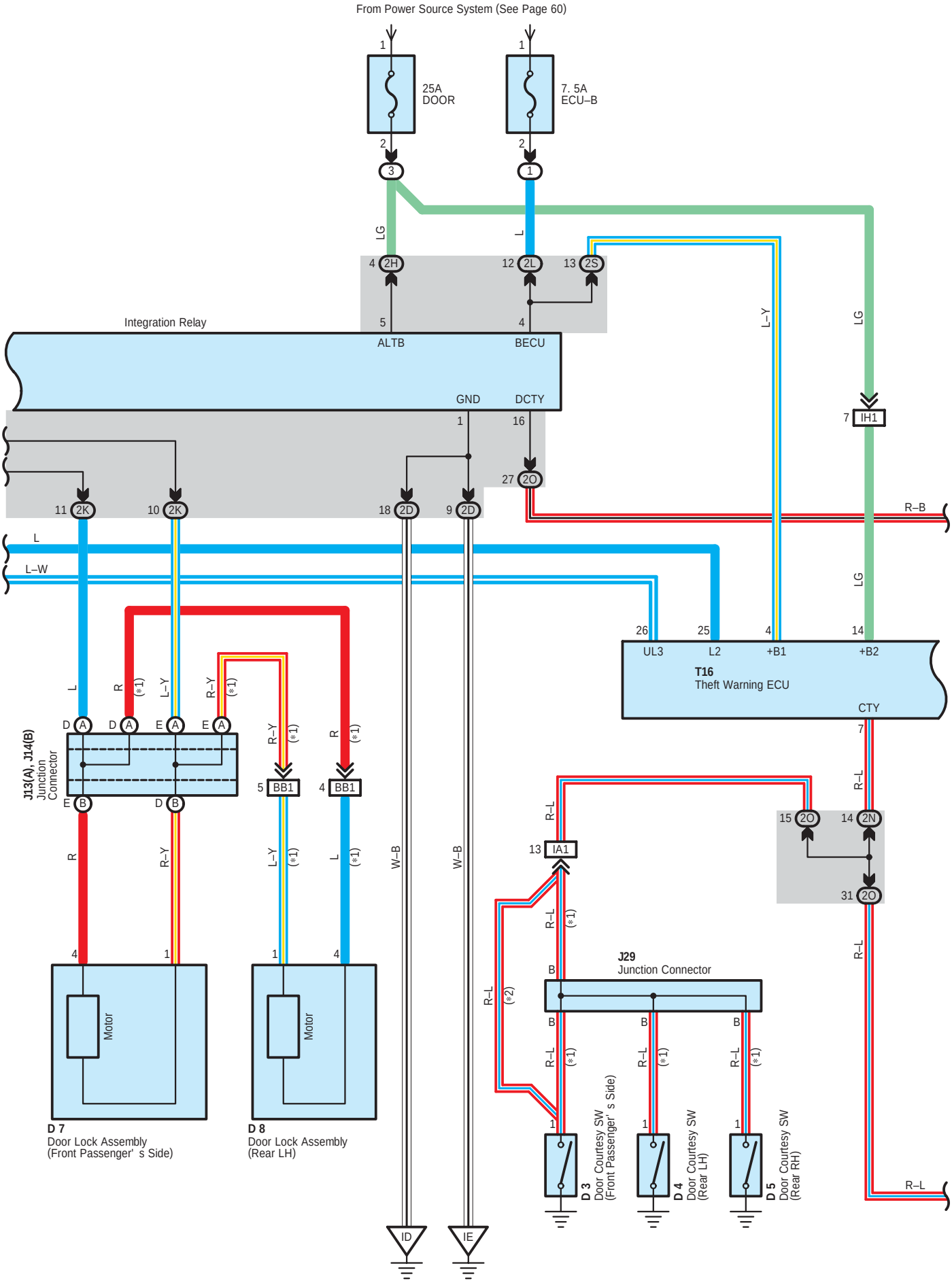

cardiagn.com

Door Lock Control

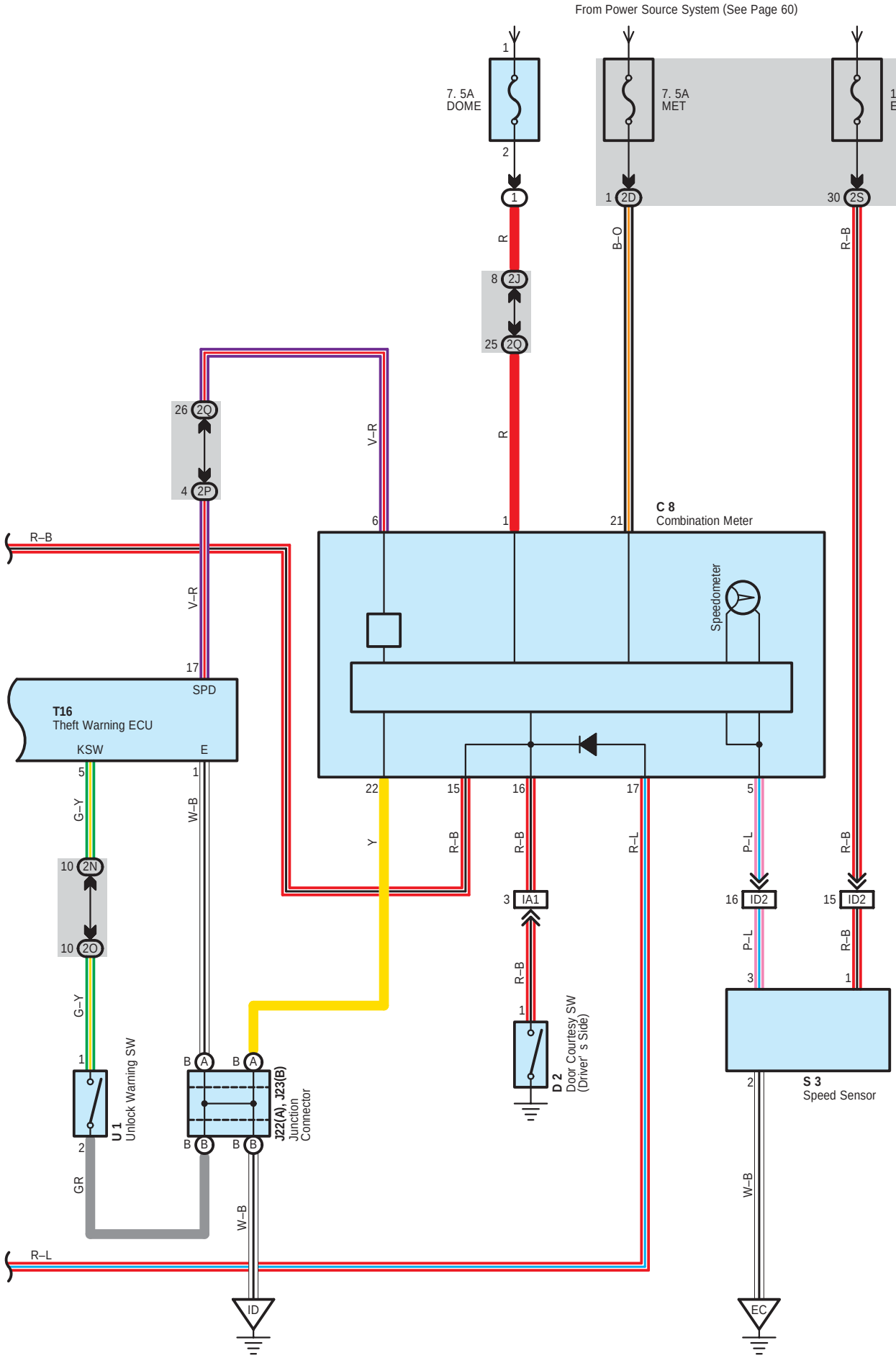

cardiagn.com

System Outline

1. Manual Lock Operation

When the door lock control SW or driver's side door key lock and unlock SW (When driver's seat belt is unfastened) are operated to LOCK position, a lock signal is input to TERMINAL 14 of the integration relay and causes the integration relay to function. The current flows from TERMINAL 5 of the integration relay to TERMINAL 3 to the door lock motors to TERMINAL 2 of the integration relay to TERMINAL 1 to GROUND and the door lock motors locks the door.

2. Manual Unlock Operation

When the door lock control SW or driver's side door key lock and unlock SW (When driver's seat belt is unfastened) are operated to UNLOCK position, an unlock signal is input to TERMINAL 11 of the integration relay and causes the integration relay to function. The current flows from TERMINAL 5 of the integration relay to TERMINAL 2 to the door lock motors to TERMINAL 3 of the integration relay to TERMINAL 1 to GROUND and the door lock motors unlocks the door.

3. Speed–Sensitive Automatic Door Lock

Under the precondition that one of the doors is opened with the ignition SW OFF, the theft warning ECU outputs lock signal to the integration relay and the relay sends the lock signal to all the door lock motors when all the flowing conditions are satisfied.

∗ All the door are shut.
∗ The unlock warning SW is ON besides the ignition SW is ON.
∗ The vehicle speed reaches about 25km/h.

4. Ignition SW Linked Automatic Door Unlock

Under the precondition that the unlock warning SW is ON as well as the ignition SW is ON after door locked by the speed–sensitive automatic door lock, the theft warning ECU outputs unlock signal to the integration relay and the relay sends the unlock signal to all the door lock motor when all the flowing conditions are satisfied.

∗ The unlock warning SW is ON.
∗ The ignition SW is OFF.

Service Hints

Integration Relay

1–Ground : Always continuity
4, 5–Ground : Always approx. 12 volts
14–Ground : Continuity with the door lock control SW or door key lock and unlock SW (When driver's seat belt is unfastened) locked
11–Ground : Continuity with the door lock control SW or door key lock and unlock SW (When driver's seat belt is unfastened) unlocked

D6 Door Lock Assembly (Driver's Side)

5–8 : Continuity with the door lock cylinder unlocked with the key
6–8 : Continuity with the door lock cylinder locked with the key

: Parts Location

Code	See Page	Code	See Page	Code	See Page
C8	38	D7	40 (Double Cab)	J24 A	38
D2	40 (Double Cab)		42 (Extra Cab)	J25 B	38
	42 (Extra Cab)		44 (Single Cab)	J26 A	38
	44 (Single Cab)	D8	40 (Double Cab)	J27 B	38
D3	40 (Double Cab)	D9	40 (Double Cab)	J28	38
	42 (Extra Cab)	F12	40 (Double Cab)	J29	38
	44 (Single Cab)		42 (Extra Cab)	P4	40 (Double Cab)
D4	40 (Double Cab)		44 (Single Cab)		42 (Extra Cab)
D5	40 (Double Cab)	J13 A	38		44 (Single Cab)
D6	40 (Double Cab)	J14 B	38	S3	37
	42 (Extra Cab)	J22 A	38	T16	39
	44 (Single Cab)	J23 B	38	U1	39

: Relay Blocks

Code	See Page	Relay Blocks (Relay Block Location)
1	22	Engine Room R/B (Engine Compartment Left)
3	35	R/B No.3 (Cowl Side Panel LH)

cardiagn.com

Door Lock Control

: **Junction Block and Wire Harness Connector**

Code	See Page	Junction Block and Wire Harness (Connector Location)
2A	28	Instrument Panel Wire and Driver Side J/B (Instrument Panel Brace RH)
2D		
2H	28	Floor Wire and Driver Side J/B (Instrument Panel Brace RH)
2J	28	Engine Room Main Wire and Driver Side J/B (Instrument Panel Brace RH)
2K	28	Floor Wire and Driver Side J/B (Instrument Panel Brace RH)
2L	28	Engine Room Main Wire and Driver Side J/B (Instrument Panel Brace RH)
2N	29	Instrument Panel Wire and Driver Side J/B (Instrument Panel Brace RH)
2O		
2P		
2Q		
2R		
2S		

: **Connector Joining Wire Harness and Wire Harness**

Code	See Page	Joining Wire Harness and Wire Harness (Connector Location)
IA1	48	Instrument Panel Wire and Floor Wire (Left Kick Panel)
ID2	48	Engine Wire and Instrument Panel Wire (Behind the Glove Box)
IH1	50	Instrument Panel Wire and Floor Wire (Right Kick Panel)
II1	50	Front Door RH Wire and Floor Wire (Right Kick Panel)
BB1	52 (Double Cab)	Rear Door No.1 Wire LH and Floor Wire (Center Pillar LH)
BC1	52 (Double Cab)	Rear Door No.1 Wire RH and Floor Wire (Center Pillar RH)

: **Ground Points**

Code	See Page	Ground Points Location
EC	46	Rear Side of the Cylinder Block
ID	48	Instrument Panel Reinforcement Center
IE	48	Instrument Panel Reinforcement RH
IF	48	Cowl Side Panel RH

cardiagn.com

cardiagn.com

Wireless Door Lock Control

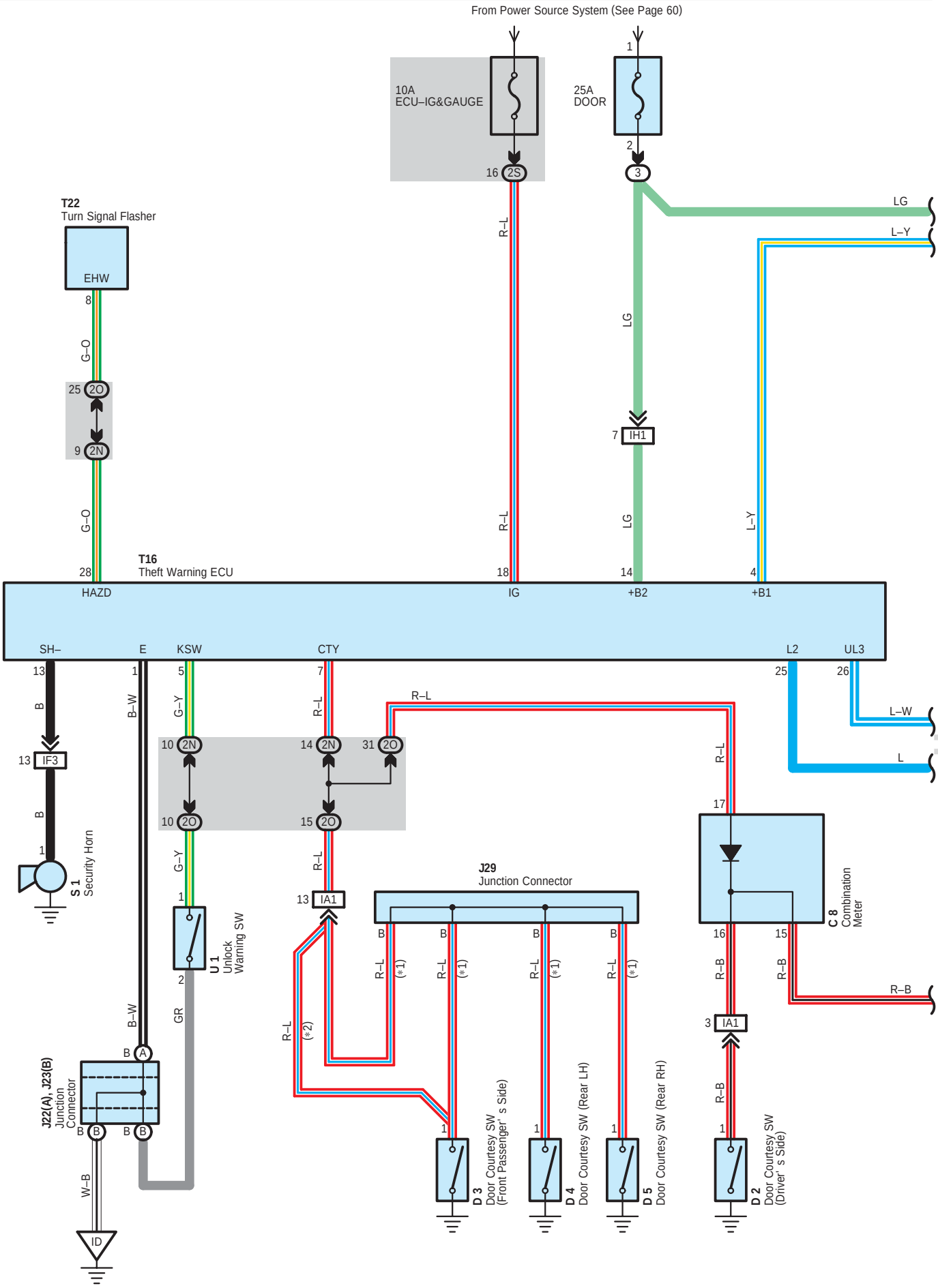

cardiagn.com

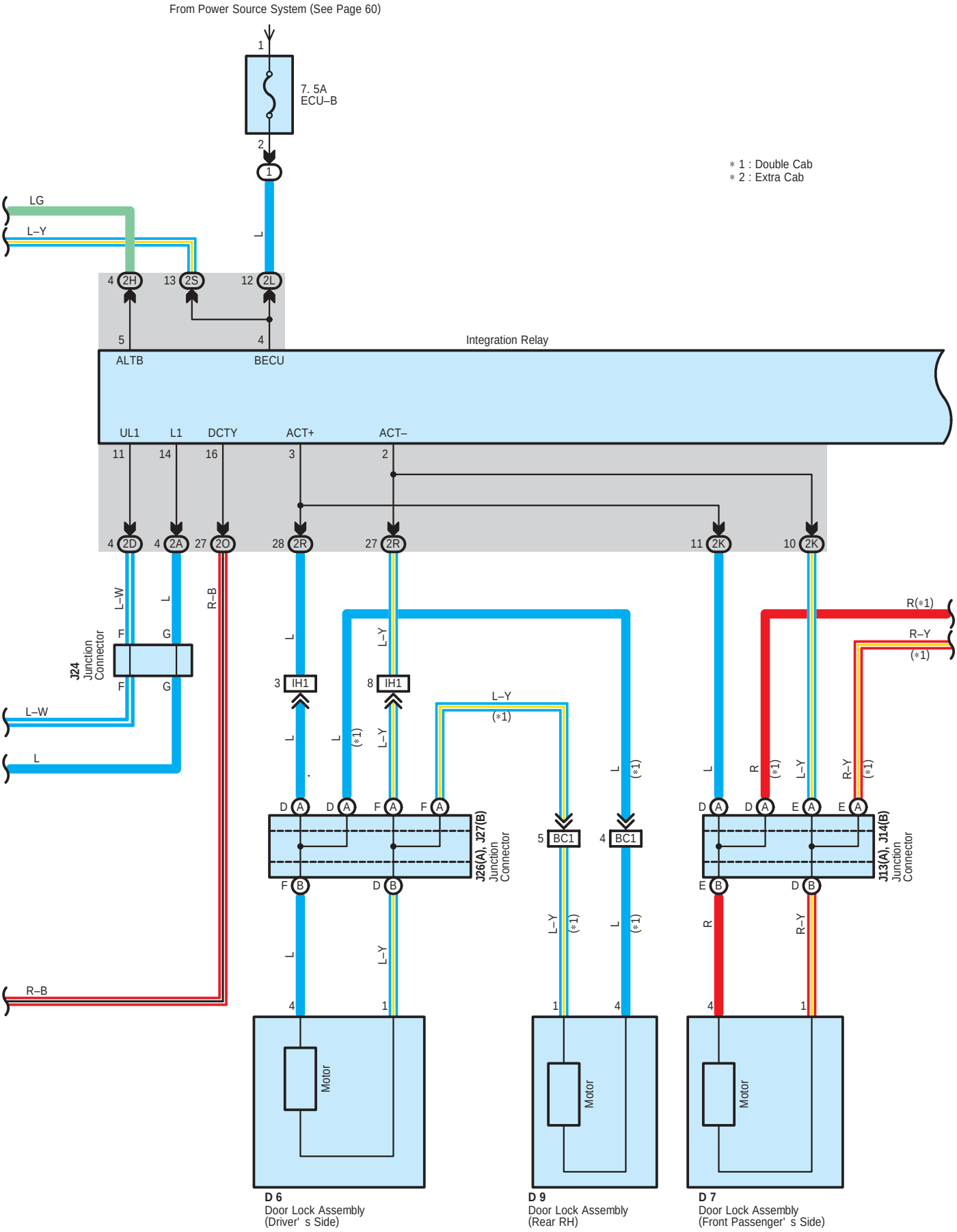

cardiagn.com

Wireless Door Lock Control

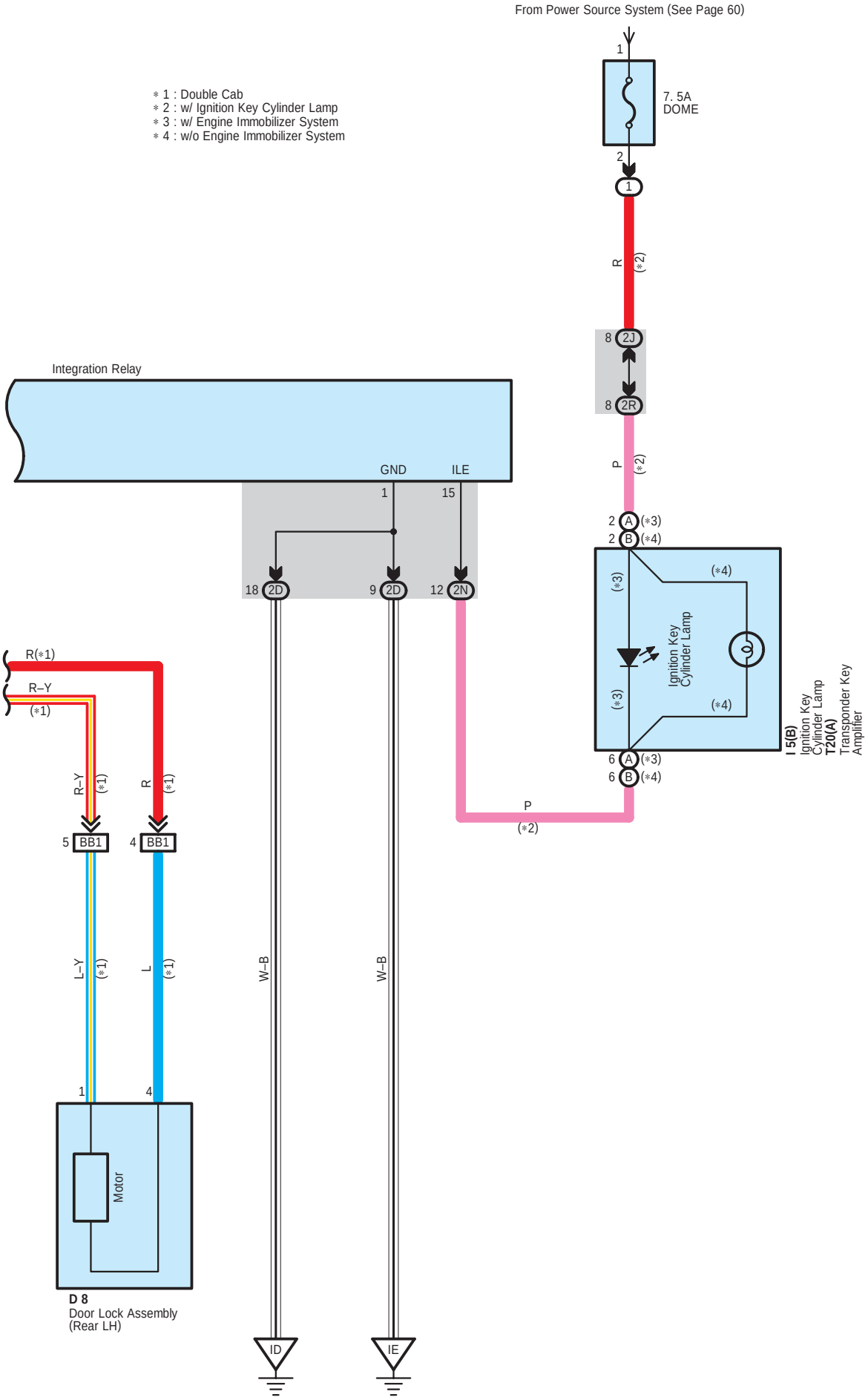

cardiagn.com

System Outline

Door lock control (Lock and unlock) and panic control (Theft alarm and flash) is performed by remote control, without the ignition key inserted in the door key cylinder, using low–power electrical waves emitted by a transmitter.

1. Normal Operation

∗ Lock operation
When the lock button on the transmitter is pressed, all the doors are locked.

∗ Unlock operation
When the unlock button on the transmitter is pressed, all the doors are locked.

2. Visual Confirmation of Lock or Unlock

If all doors indicate that they are locked after the lock command, security horn sound and hazard lights will sound and flash once. If any door indicates that it is open after the unlock command, theft deterrent horn sound and hazard lights will sound and flash twice.

3. Automatic Lock Operation

All the doors are automatically relocked unless any door is opened within 15 seconds after pushing the button (Transmitter) to unlock all the doors under conditions that the ignition key is not inserted into the ignition key cylinder (Unlock warning SW off), ignition SW is at OFF and all the doors are completely closed.

4. Illuminated Entry Function

When pushing the unlock button (Transmitter), it turns on the lights, such as the ignition key cylinder lamp for approx. 30 seconds. If the doors are locked with lock button (Transmitter) during this operation and ignition key is in the ignition key cylinder (Unlock warning SW ON) to turn ON the ignition SW, lighting is cancelled and the lights immediately fade out.

5. Panic Alarm Operation

When the panic button on the transmitter is pushed, alarm sound and flash starts. The panic alarm operation is canceled when one of the lock button, unlock button and panic alarm button is pressed.

6. Door Ajar Warning (By Pushing Wireless Lock Button)

Half–shut door is warned with security horn sound (For 1 second) by pushing the lock button (Transmitter) when one of the doors is not completely shut.

Service Hints

D2, D3, D4, D5 Door Courtesy SW (Driver's Side), (Front Passenger's Side), (Rear LH), (Rear RH)

1–Ground : Continuity with each of the door open

T16 Theft Warning ECU

4, 14–Ground : Always approx. 12 volts
1–Ground : Always continuity
18–Ground : Approx. 12 volts with the ignition SW at ON position

U1 Unlock Warning SW

2–1 : Closed with the ignition key in the cylinder

○ : Parts Location

Code	See Page	Code	See Page	Code	See Page
C8	38	D6	44 (Single Cab)	J24	38
D2	40 (Double Cab)	D7	40 (Double Cab)	J26 A	38
	42 (Extra Cab)		42 (Extra Cab)	J27 B	38
	44 (Single Cab)		44 (Single Cab)	J29	38
D3	40 (Double Cab)	D8	40 (Double Cab)	S1	37
	42 (Extra Cab)	D9	40 (Double Cab)	T16	39
	44 (Single Cab)	I5 B	38	T20 A	39
D4	40 (Double Cab)	J13 A	38	T22	39
D5	40 (Double Cab)	J14 B	38	U1	39
D6	40 (Double Cab)	J22 A	38		
	42 (Extra Cab)	J23 B	38		

cardiagn.com

: **Relay Blocks**

Code	See Page	Relay Blocks (Relay Block Location)
1	22	Engine Room R/B (Engine Compartment Left)
3	35	R/B No.3 (Cowl Side Panel LH)

: **Junction Block and Wire Harness Connector**

Code	See Page	Junction Block and Wire Harness (Connector Location)
2A	28	Instrument Panel Wire and Driver Side J/B (Instrument Panel Brace RH)
2D		
2H	28	Floor Wire and Driver Side J/B (Instrument Panel Brace RH)
2J	28	Engine Room Main Wire and Driver Side J/B (Instrument Panel Brace RH)
2K	28	Floor Wire and Driver Side J/B (Instrument Panel Brace RH)
2L	28	Engine Room Main Wire and Driver Side J/B (Instrument Panel Brace RH)
2N	29	Instrument Panel Wire and Driver Side J/B (Instrument Panel Brace RH)
2O		
2R		
2S		

: **Connector Joining Wire Harness and Wire Harness**

Code	See Page	Joining Wire Harness and Wire Harness (Connector Location)
IA1	48	Instrument Panel Wire and Floor Wire (Left Kick Panel)
IF3	50	Engine Room Main Wire and Instrument Panel Wire (Behind the Driver Side J/B)
IH1	50	Instrument Panel Wire and Floor Wire (Right Kick Panel)
BB1	52 (Double Cab)	Rear Door No.1 Wire LH and Floor Wire (Center Pillar LH)
BC1	52 (Double Cab)	Rear Door No.1 Wire RH and Floor Wire (Center Pillar RH)

: **Ground Points**

Code	See Page	Ground Points Location
ID	48	Instrument Panel Reinforcement Center
IE	48	Instrument Panel Reinforcement RH

cardiagn.com

cardiagn.com

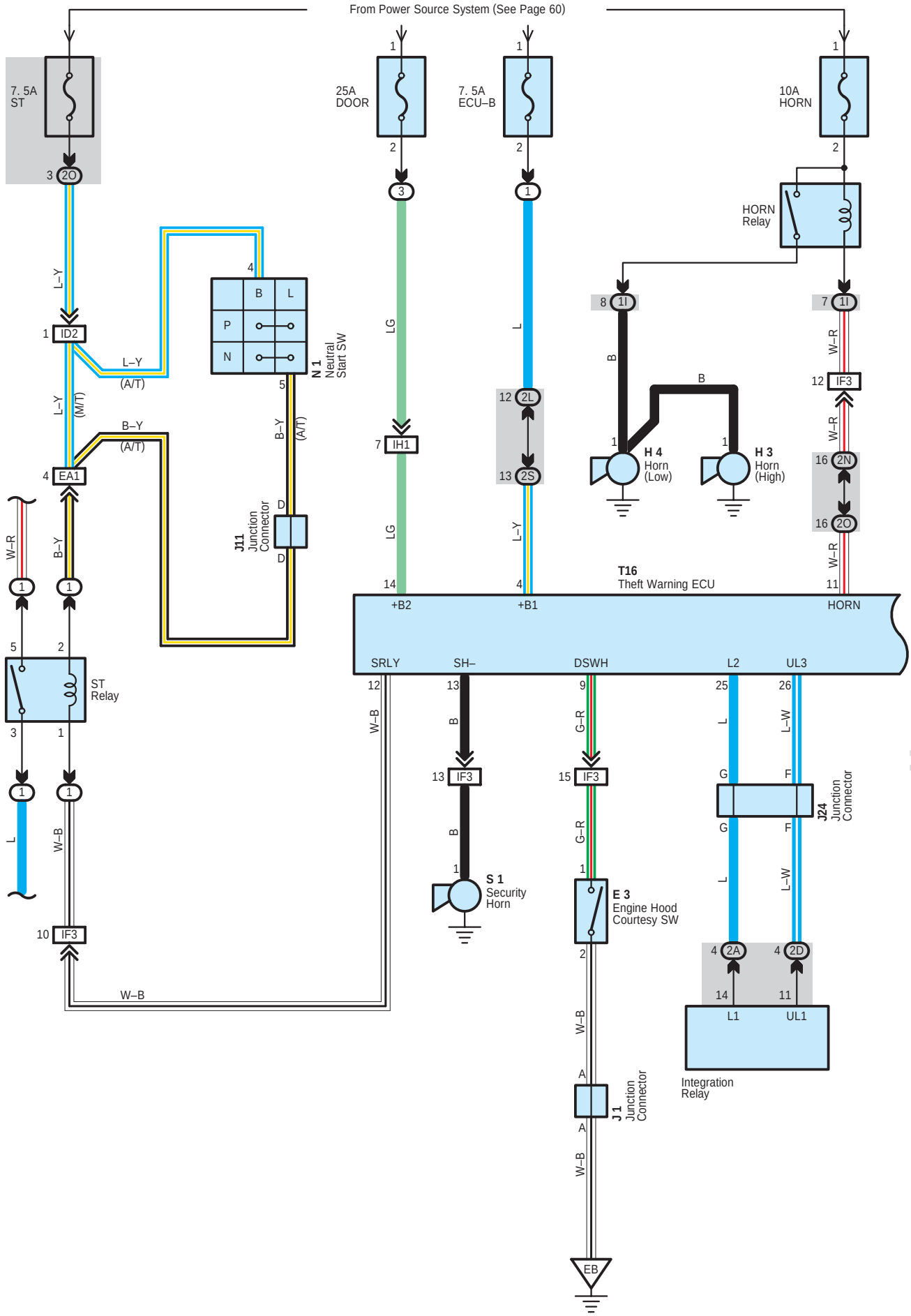

cardiagn.com

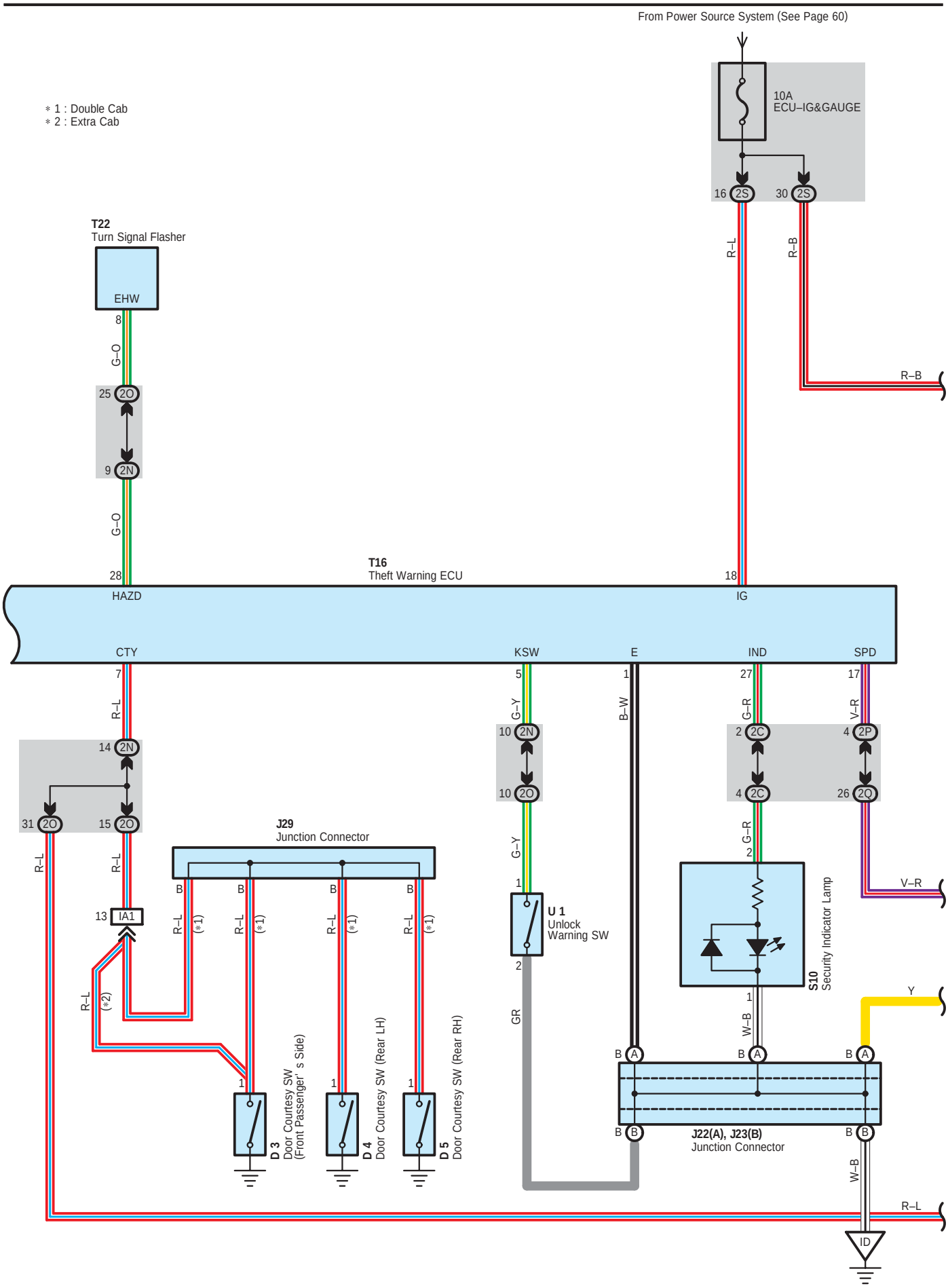

cardiagn.com

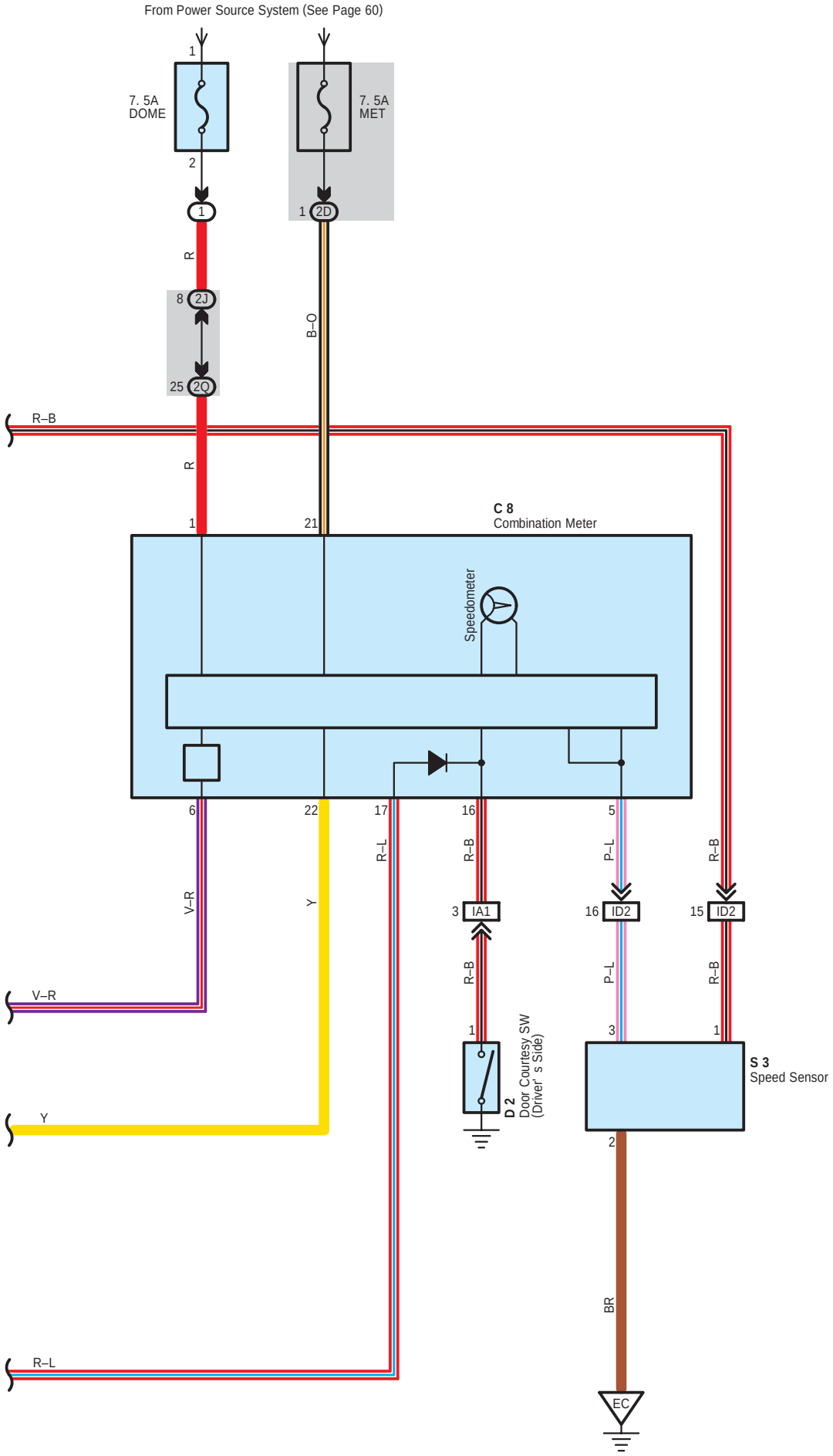

cardiagn.com

Service Hints

D2, D3, D4, D5 Door Courtesy SW (Driver's Side), (Front Passenger's Side), (Rear LH), (Rear RH)
1–Ground : Continuity with each of the door open

E3 Engine Hood Courtesy SW
1–2 : Open with the engine hood open

T16 Theft Warning ECU
9–Ground : Continuity with the engine hood close
4, 14–Ground : Always approx. 12 volts
1–Ground : Always continuity
18–Ground : Approx. 12 volts with the ignition SW at ON position

: Parts Location

Code	See Page	Code		See Page	Code	See Page
C8	38	E3		36	J29	38
D2	40 (Double Cab)	H3		36	N1	37
	42 (Extra Cab)	H4		36	S1	37
	44 (Single Cab)	J1		37	S3	37
D3	40 (Double Cab)	J11		38	S10	39
	42 (Extra Cab)	J22	A	38	T16	39
	44 (Single Cab)	J23	B	38	T22	39
D4	40 (Double Cab)	J24	A	38	U1	39
D5	40 (Double Cab)	J25	B	38		

: Relay Blocks

Code	See Page	Relay Blocks (Relay Block Location)
1	22	Engine Room R/B (Engine Compartment Left)
3	35	R/B No.3 (Cowl Side Panel LH)

: Junction Block and Wire Harness Connector

Code	See Page	Junction Block and Wire Harness (Connector Location)
1I	24	Engine Room Main Wire and Engine Room J/B (Engine Compartment Left)
2A	28	Instrument Panel Wire and Driver Side J/B (Instrument Panel Brace RH)
2C		
2D		
2J	28	Engine Room Main Wire and Driver Side J/B (Instrument Panel Brace RH)
2L		
2N	29	Instrument Panel Wire and Driver Side J/B (Instrument Panel Brace RH)
2O		
2P		
2Q		
2S		

: Connector Joining Wire Harness and Wire Harness

Code	See Page	Joining Wire Harness and Wire Harness (Connector Location)
EA1	46	Engine Wire and Engine Room Main Wire (Inside of Engine Room R/B and Engine Room J/B)
IA1	48	Instrument Panel Wire and Floor Wire (Left Kick Panel)
ID2	48	Engine Wire and Instrument Panel Wire (Behind the Glove Box)
IF3	50	Engine Room Main Wire and Instrument Panel Wire (Behind the Driver Side J/B)
IH1	50	Instrument Panel Wire and Floor Wire (Right Kick Panel)

cardiagn.com

▽ : **Ground Points**

Code	See Page	Ground Points Location
EB	46	Left Side of the Fender Apron
EC	46	Rear Side of the Cylinder Block
ID	48	Instrument Panel Reinforcement Center

cardiagn.com

cardiagn.com

Power Window

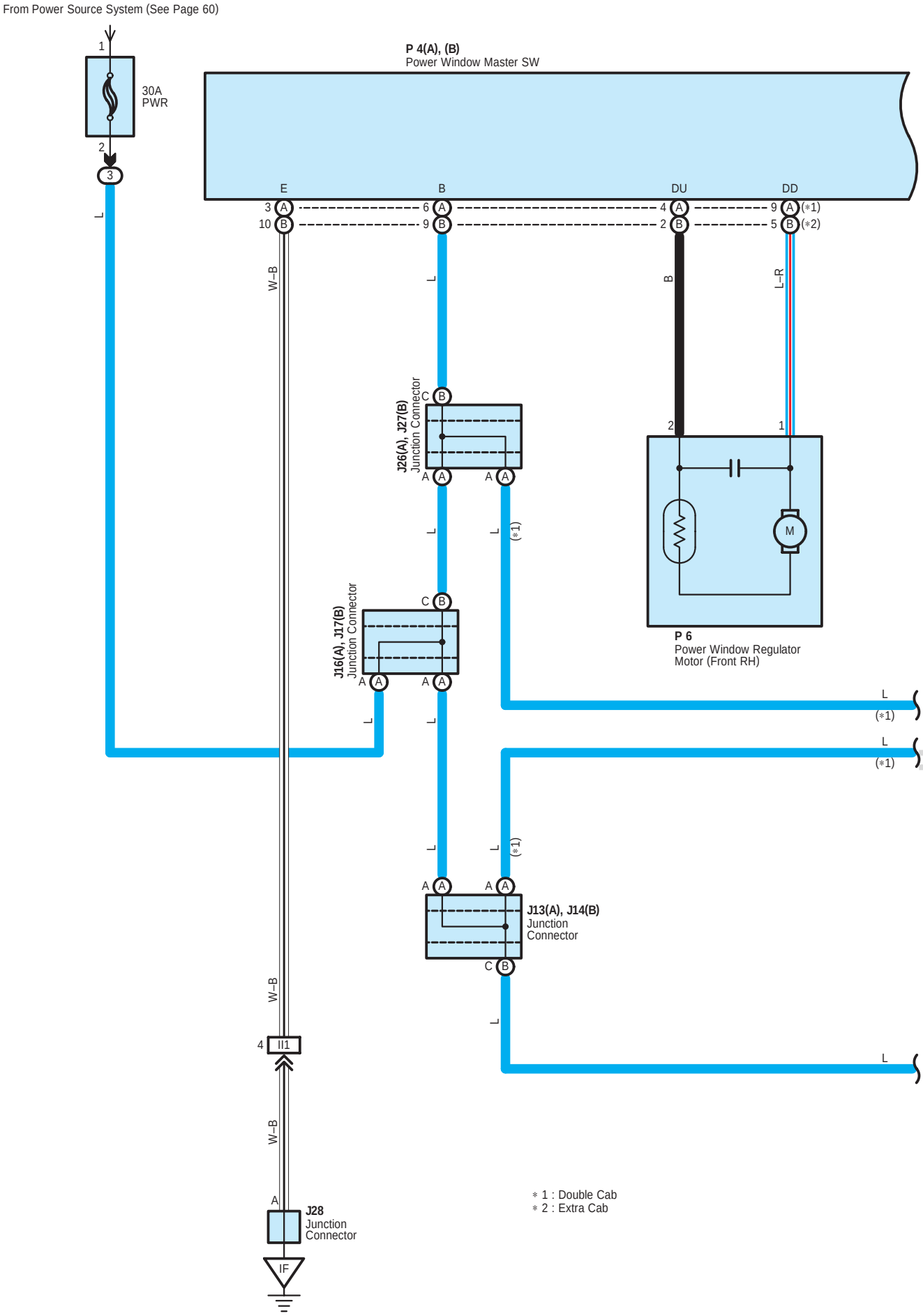

cardiagn.com

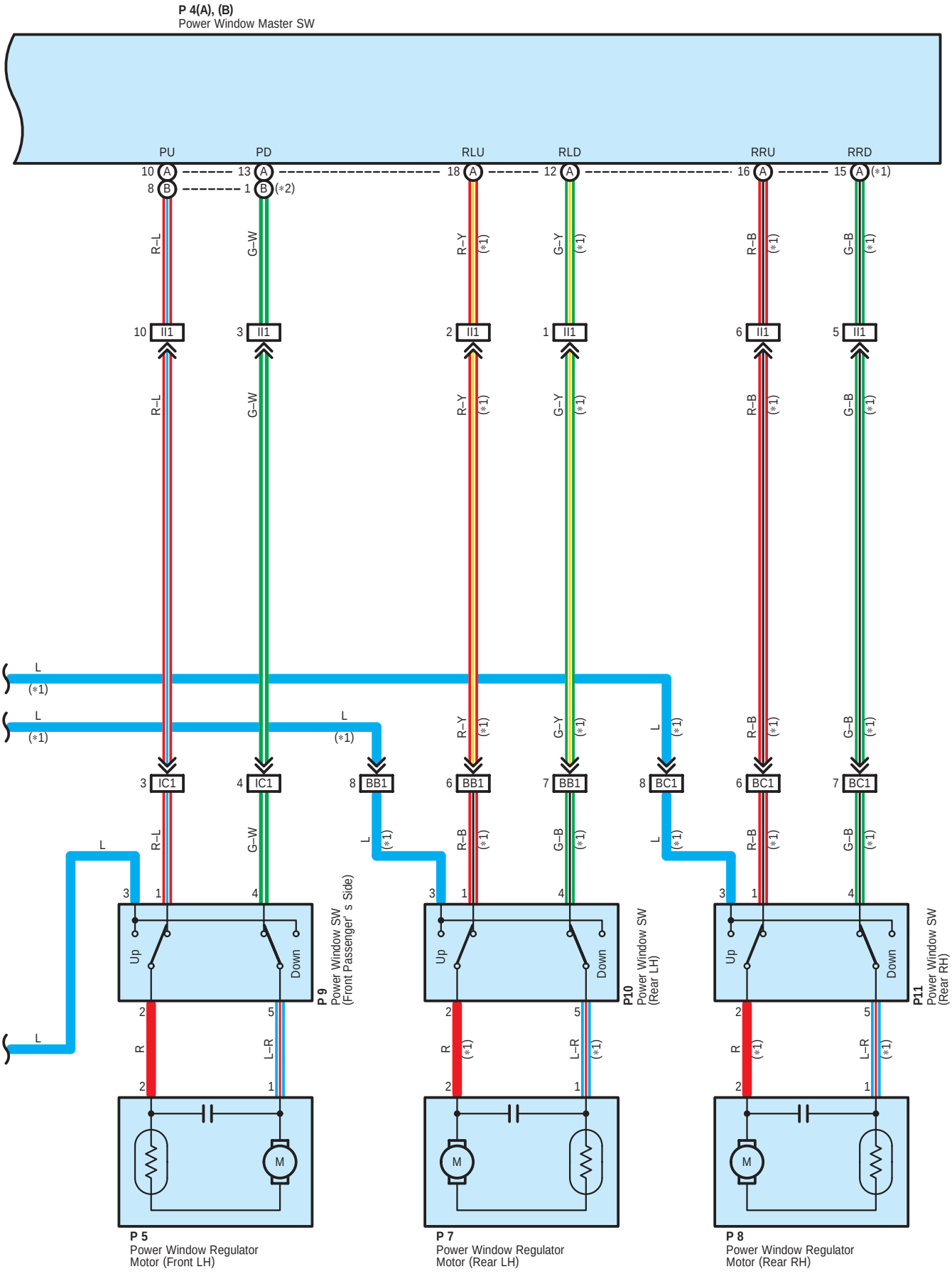

cardiagn.com

Power Window

System Outline

1. Manual Down or Up Operation

When the power window master SW is pushed one step, the motor rotates to open the window.
When the power window master SW is pulled up one step, the motor rotates in the opposite direction, to close the window.
All the other windows can be opened/closed as well, by the operation of the power window master SW or respective power window SW.
When the window lock SW is pushed to the lock side, the ground circuit to the passenger's window becomes open. As a result, even if Open/Close operation of the passenger's window is attempted, the current from TERMINAL E of the power window master SW is not grounded and the motor does not rotate, so the passenger's window can not be operated and window lock occurs.

2. Auto Down Operation (Driver's Window)

When the power window master SW is pushed two steps, the motor rotates to open the window automatically.

3. Stopping of Auto Down Operation (Driver's Window)

Auto operation can be stopped in mid–course with switching power window master SW one step upward during the down operation.

Service Hints

P4 (A), (B) Power Window Master SW

B–Ground : Approx. 12 volts with the ignition SW at ON position
E–Ground : Always continuity
DU–Ground : Approx. 12 volts with the ignition SW on and the master SW (Driver's window) at UP or AUTO UP position
DD–Ground : Approx. 12 volts with the ignition SW on and the master SW (Driver's window) at DOWN or AUTO DOWN position

○ : Parts Location

Code		See Page	Code		See Page	Code	See Page
J13	A	38	P4	B	42 (Extra Cab)	P8	40 (Double Cab)
J14	B	38	P5		40 (Double Cab)	P9	40 (Double Cab)
J16	A	38			42 (Extra Cab)		42 (Extra Cab)
J17	B	38			44 (Single Cab)		44 (Single Cab)
J26	A	38	P6		40 (Double Cab)	P10	40 (Double Cab)
J27	B	38			42 (Extra Cab)	P11	40 (Double Cab)
J28		38			44 (Single Cab)		
P4	A	40 (Double Cab)	P7		40 (Double Cab)		

⬭ : Relay Blocks

Code	See Page	Relay Blocks (Relay Block Location)
3	35	R/B No.3 (Cowl Side Panel LH)

▭ : Connector Joining Wire Harness and Wire Harness

Code	See Page	Joining Wire Harness and Wire Harness (Connector Location)
IC1	48	Front Door LH Wire and Floor Wire (Left Kick Panel)
II1	50	Front Door RH Wire and Floor Wire (Right Kick Panel)
BB1	52 (Double Cab)	Rear Door No.1 Wire LH and Floor Wire (Center Pillar LH)
BC1	52 (Double Cab)	Rear Door No.1 Wire RH and Floor Wire (Center Pillar RH)

▽ : Ground Points

Code	See Page	Ground Points Location
IF	48	Cowl Side Panel RH

cardiagn.com

cardiagn.com

Front Wiper and Washer

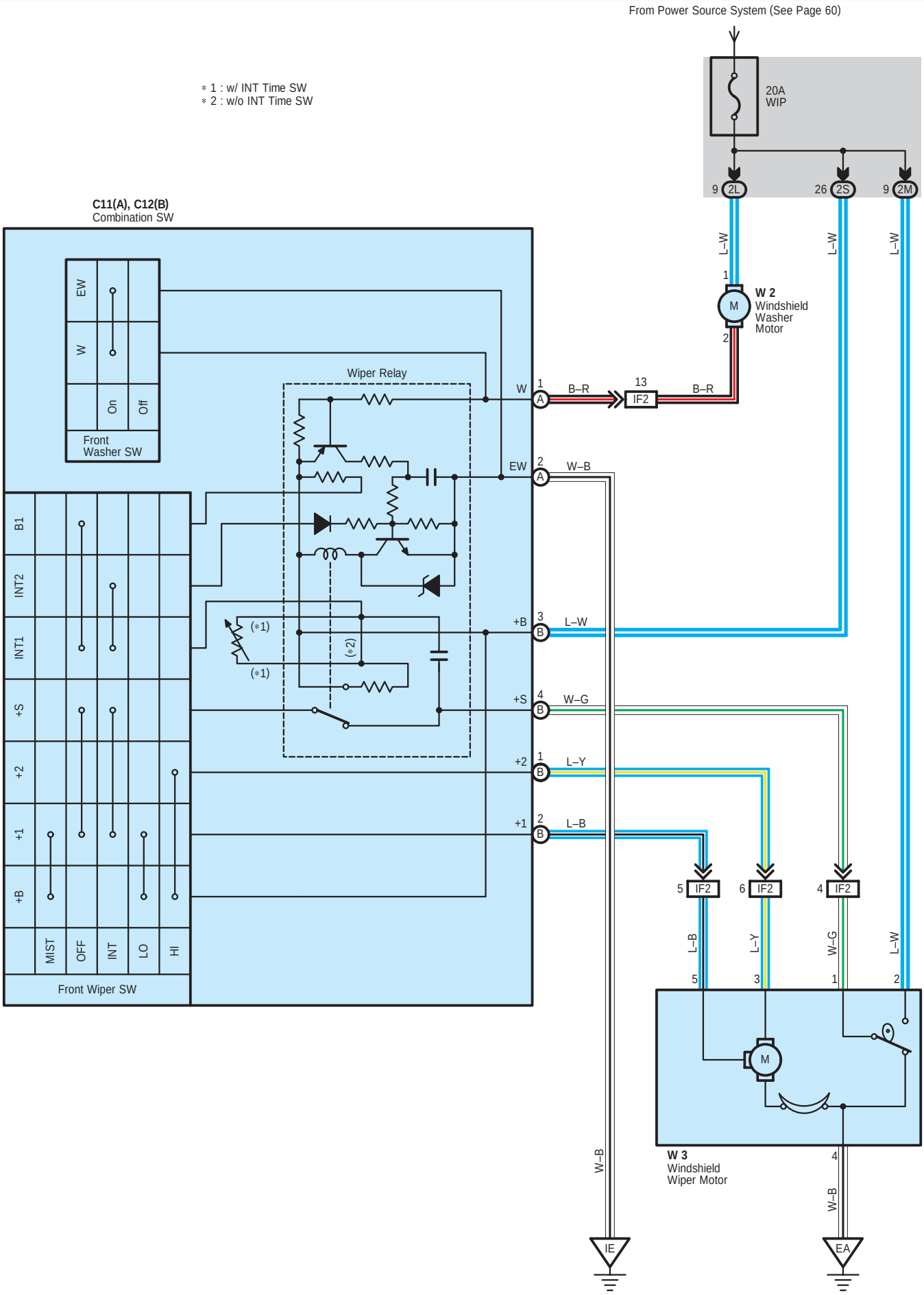

cardiagn.com

System Outline

With the ignition SW turned on, the current flows to TERMINAL (B) 3 of the front wiper and washer SW, TERMINAL 1 of the windshield washer motor and TERMINAL 2 of the windshield wiper motor through the WIP fuse.

1. Low Speed Position

With the front wiper SW turned to LO position, the current flows from TERMINAL (B) 3 of the front wiper and washer SW to TERMINAL (B) 2 to TERMINAL 5 of the windshield wiper motor to TERMINAL 4 to GROUND and causes the windshield wiper motor to run at low speed.

2. High Speed Position

With the front wiper SW turned to HI position, the current flows from TERMINAL (B) 3 of the front wiper and washer SW to TERMINAL (B) 1 to TERMINAL 3 of the windshield wiper motor to TERMINAL 4 to GROUND and causes the windshield wiper motor to run at high speed.

3. INT Position

With the front wiper SW turned to INT position, the wiper relay operates and current flows from TERMINAL (B) 3 of the front wiper and washer SW to TERMINAL (A) 2 to GROUND. This activates the intermittent circuit and the current flows from TERMINAL (B) 3 of the front wiper and washer SW to TERMINAL (B) 2 to TERMINAL 5 of the windshield wiper motor to TERMINAL 4 to GROUND and the wiper operates.
The intermittent operation is controlled by the charge/discharge function of the condenser installed in the relay, and the intermittent time is controlled by a time control SW to change the charging time of the condenser (w/ INT time SW).
Intermittent operation is controlled by a condenser charge and discharge function in the relay (w/o INT time SW).

4. Mist Position

With the front wiper SW turned to MIST position, the current flows from TERMINAL (B) 3 of the front wiper and washer SW to TERMINAL (B) 2 to TERMINAL 5 of the windshield wiper motor to TERMINAL 4 to GROUND and causes the windshield wiper motor to run at low speed.

5. Washer Interlocking Operation

With the washer SW pulled to ON position, the current flows from the WIP fuse to TERMINAL 1 of the windshield washer motor to TERMINAL 2 to TERMINAL (A) 1 of the front wiper and washer SW to TERMINAL (A) 2 to GROUND and causes the windshield washer motor to run and the window washer to spray. Simultaneously, current flows from the WIP fuse to TERMINAL (B) 3 of the front wiper and washer SW to TERMINAL (B) 2 to TERMINAL 5 of the windshield wiper motor to TERMINAL 4 to GROUND, causing the wiper to function.

Service Hints

C11 (A), C12 (B) Combination SW

(A) 2–Ground : Always continuity
(B) 3–Ground : Approx. 12 volts with the ignition SW at ON position
(B) 2–Ground : Approx. 12 volts with the ignition SW on and the front wiper SW at LO or MIST position
Approx. 12 volts intermittently with the ignition SW on and the front wiper SW at INT position
(B) 4–Ground : Approx. 12 volts with the ignition SW on and unless the windshield wiper motor at STOP position
(B) 1–Ground : Approx. 12 volts with the ignition SW on and the front wiper SW at HI position

W3 Windshield Wiper Motor

2–1 : Closed unless the windshield wiper motor at STOP position

○ : Parts Location

Code		See Page	Code	See Page	Code	See Page
C11	A	38	W2	37		
C12	B	38	W3	37		

▭ : Junction Block and Wire Harness Connector

Code	See Page	Junction Block and Wire Harness (Connector Location)
2L	28	Engine Room Main Wire and Driver Side J/B (Instrument Panel Brace RH)
2M		
2S	29	Instrument Panel Wire and Driver Side J/B (Instrument Panel Brace RH)

▭ : Connector Joining Wire Harness and Wire Harness

Code	See Page	Joining Wire Harness and Wire Harness (Connector Location)
IF2	50	Engine Room Main Wire and Instrument Panel Wire (Behind the Driver Side J/B)

cardiagn.com

▽ : **Ground Points**

Code	See Page	Ground Points Location
EA	46	Right Side of the Fender Apron
IE	48	Instrument Panel Reinforcement RH

cardiagn.com

cardiagn.com

Horn

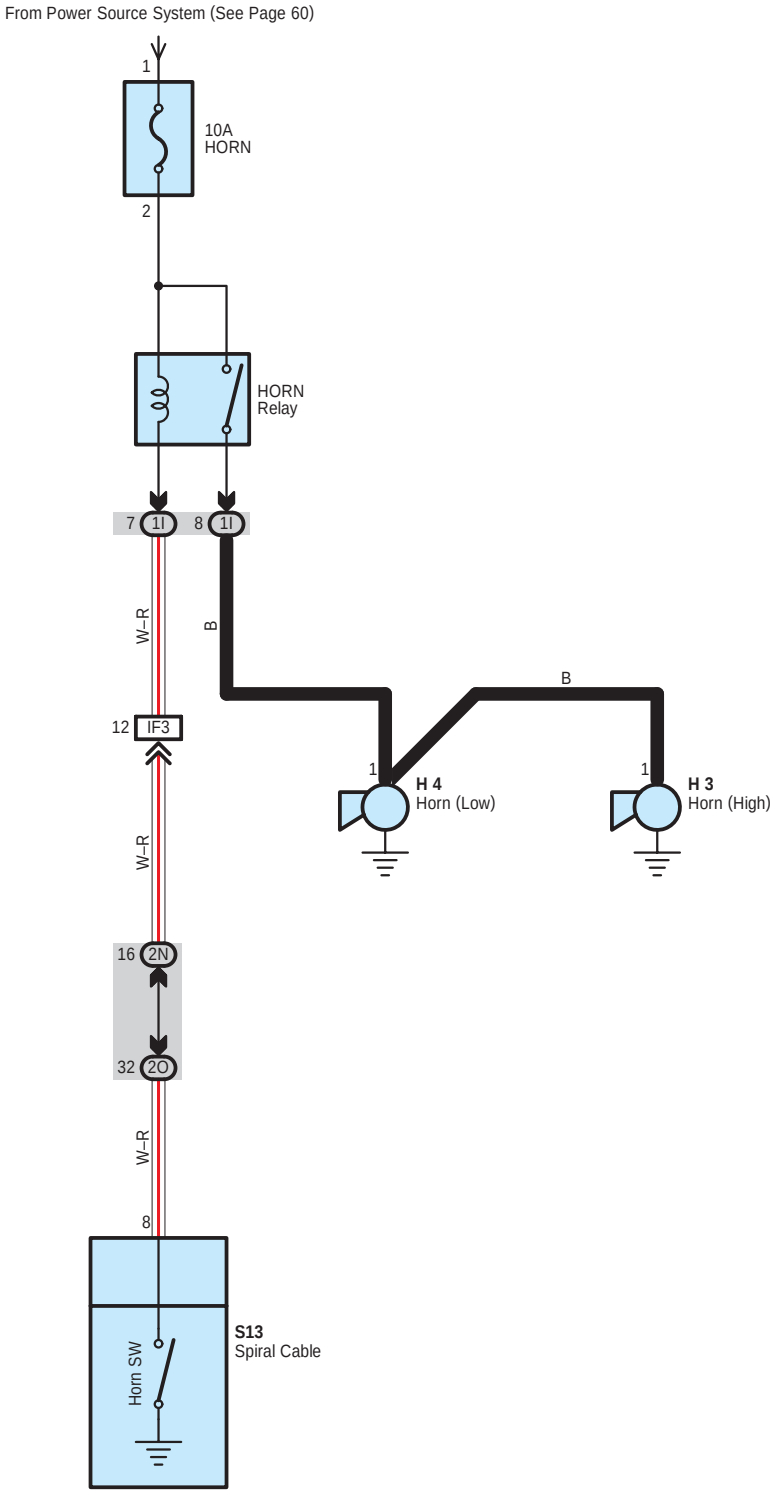

cardiagn.com

Service Hints

H3, H4 Horn (High), (Low)

1–Ground : Approx. 12 volts with the horn SW on

: Parts Location

Code	See Page	Code	See Page	Code	See Page
H3	36	H4	36	S13	39

: Junction Block and Wire Harness Connector

Code	See Page	Junction Block and Wire Harness (Connector Location)
1I	24	Engine Room Main Wire and Engine Room J/B (Engine Compartment Left)
2N	29	Instrument Panel Wire and Driver Side J/B (Instrument Panel Brace RH)
2O		

: Connector Joining Wire Harness and Wire Harness

Code	See Page	Joining Wire Harness and Wire Harness (Connector Location)
IF3	50	Engine Room Main Wire and Instrument Panel Wire (Behind the Driver Side J/B)

cardiagn.com

Cigarette Lighter

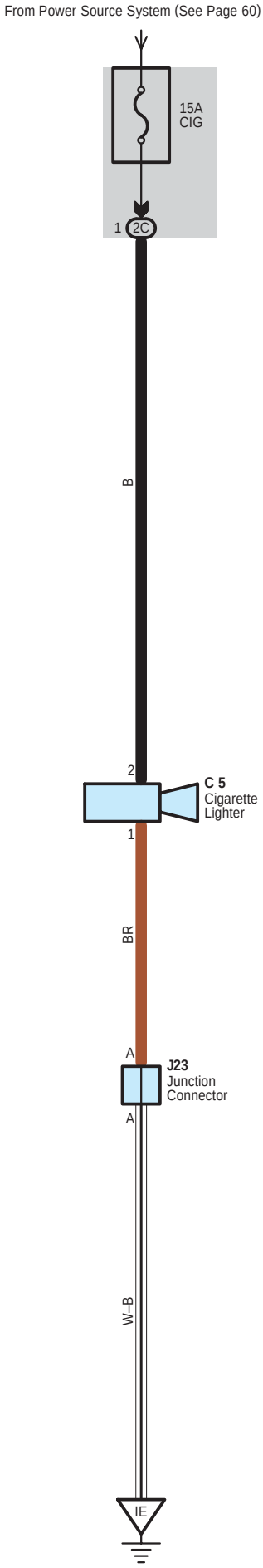

cardiagn.com

Service Hints

C5 Cigarette Lighter

2–Ground : Approx. 12 volts with the ignition SW at ACC or ON position

1–Ground : Always continuity

: Parts Location

Code	See Page	Code	See Page	Code	See Page
C5	38	J23	38		

: Junction Block and Wire Harness Connector

Code	See Page	Junction Block and Wire Harness (Connector Location)
2C	28	Instrument Panel Wire and Driver Side J/B (Instrument Panel Brace RH)

: Ground Points

Code	See Page	Ground Points Location
IE	48	Instrument Panel Reinforcement RH

cardiagn.com

Power Outlet

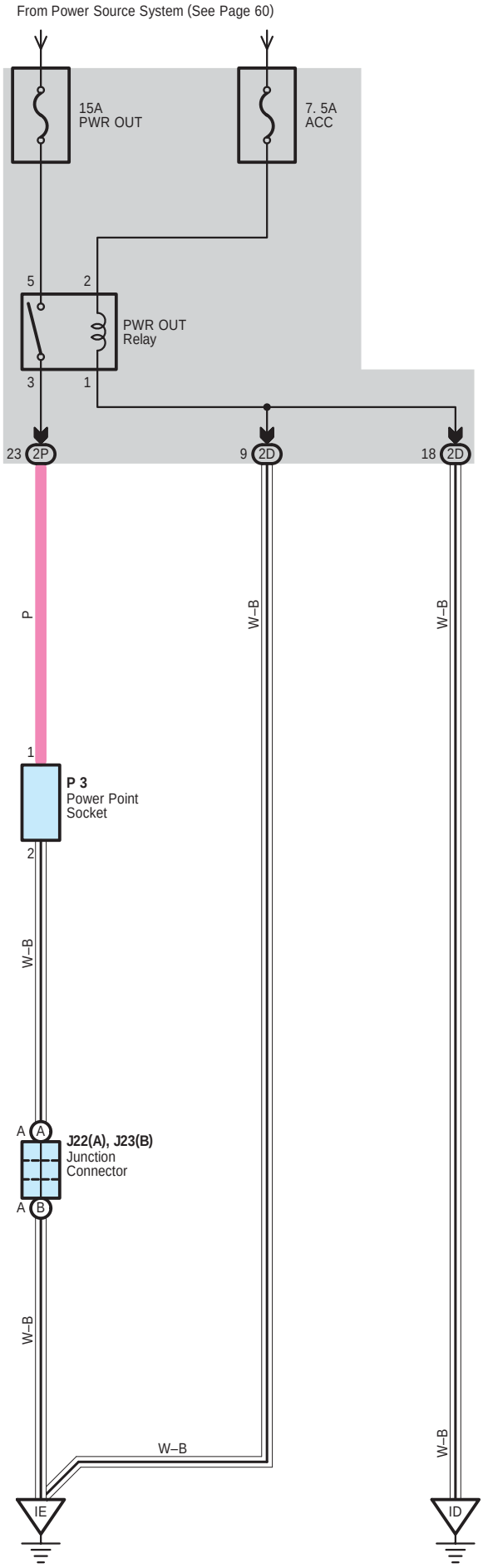

cardiagn.com

Service Hints

P3 Power Point Socket

1–Ground : Approx. 12 volts with the ignition SW at ACC or ON position
2–Ground : Always continuity

: Parts Location

Code		See Page	Code		See Page	Code	See Page
J22	A	38	J23	B	38	P3	39

: Junction Block and Wire Harness Connector

Code	See Page	Junction Block and Wire Harness (Connector Location)
2D	28	Instrument Panel Wire and Driver Side J/B (Instrument Panel Brace RH)
2P	29	

: Ground Points

Code	See Page	Ground Points Location
ID	48	Instrument Panel Reinforcement Center
IE	48	Instrument Panel Reinforcement RH

cardiagn.com

Clock

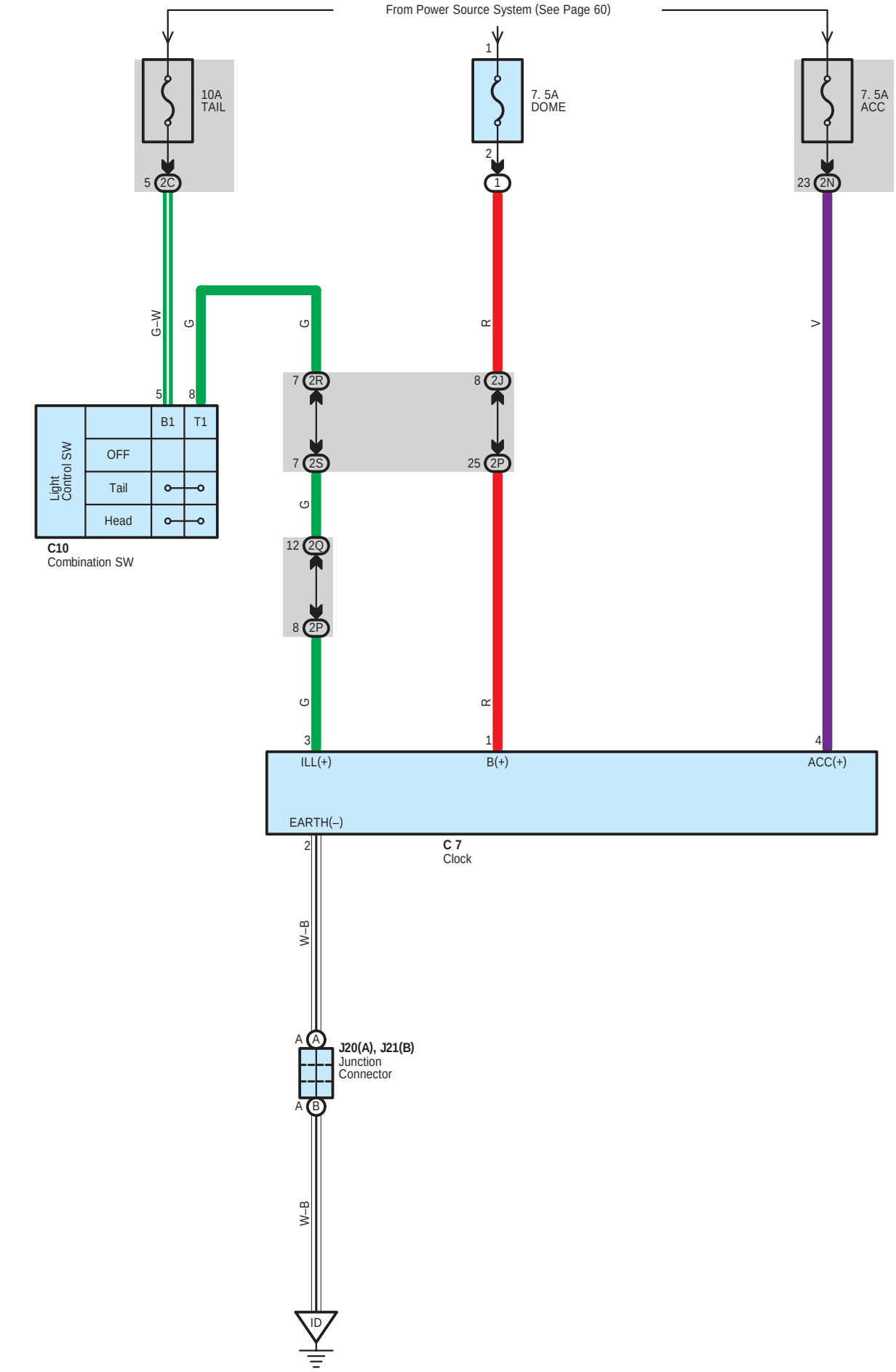

cardiagn.com

Service Hints

C7 Clock

4–Ground : Approx. 12 volts with the ignition SW at ACC or ON position
1–Ground : Always approx. 12 volts
3–Ground : Approx. 12 volts with the light control SW at TAIL or HEAD position
2–Ground : Always continuity

: Parts Location

Code	See Page	Code		See Page	Code	See Page
C7	38	J20	A	38		
C10	38	J21	B	38		

: Relay Blocks

Code	See Page	Relay Blocks (Relay Block Location)
1	22	Engine Room R/B (Engine Compartment Left)

: Junction Block and Wire Harness Connector

Code	See Page	Junction Block and Wire Harness (Connector Location)
2C	28	Instrument Panel Wire and Driver Side J/B (Instrument Panel Brace RH)
2J	28	Engine Room Main Wire and Driver Side J/B (Instrument Panel Brace RH)
2N	29	Instrument Panel Wire and Driver Side J/B (Instrument Panel Brace RH)
2P		
2Q		
2R		
2S		

: Ground Points

Code	See Page	Ground Points Location
ID	48	Instrument Panel Reinforcement Center

cardiagn.com

Rear Window Defogger

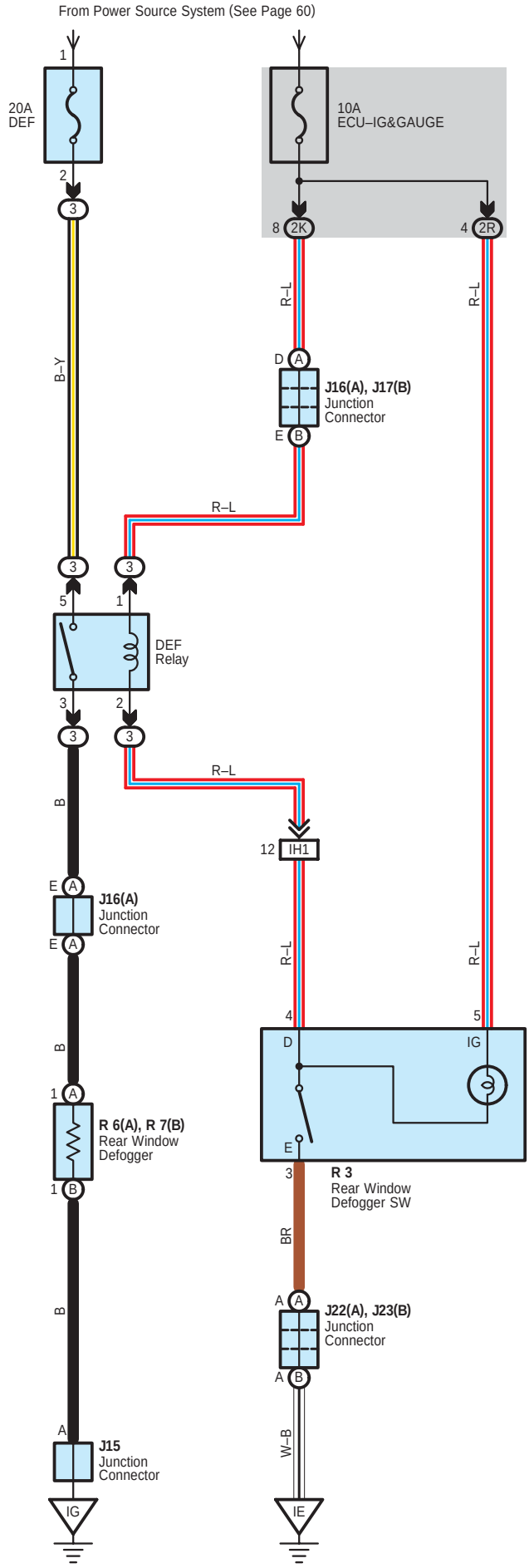

cardiagn.com

Service Hints

DEF Relay

5–3 : Closed with the ignition SW at ON position and the rear window defogger SW at ON position

: Parts Location

Code		See Page	Code		See Page	Code		See Page
J15		38	J23	B	38	R7	B	41 (Double Cab)
J16	A	38	R3		39			43 (Extra Cab)
J17	B	38	R6	A	41 (Double Cab)			
J22	A	38			43 (Extra Cab)			

: Relay Blocks

Code	See Page	Relay Blocks (Relay Block Location)
3	35	R/B No.3 (Cowl Side Panel LH)

: Junction Block and Wire Harness Connector

Code	See Page	Junction Block and Wire Harness (Connector Location)
2K	28	Floor Wire and Driver Side J/B (Instrument Panel Brace RH)
2R	29	Instrument Panel Wire and Driver Side J/B (Instrument Panel Brace RH)

: Connector Joining Wire Harness and Wire Harness

Code	See Page	Joining Wire Harness and Wire Harness (Connector Location)
IH1	50	Instrument Panel Wire and Floor Wire (Right Kick Panel)

: Ground Points

Code	See Page	Ground Points Location
IE	48	Instrument Panel Reinforcement RH
IG	48	Cowl Side Panel LH

cardiagn.com

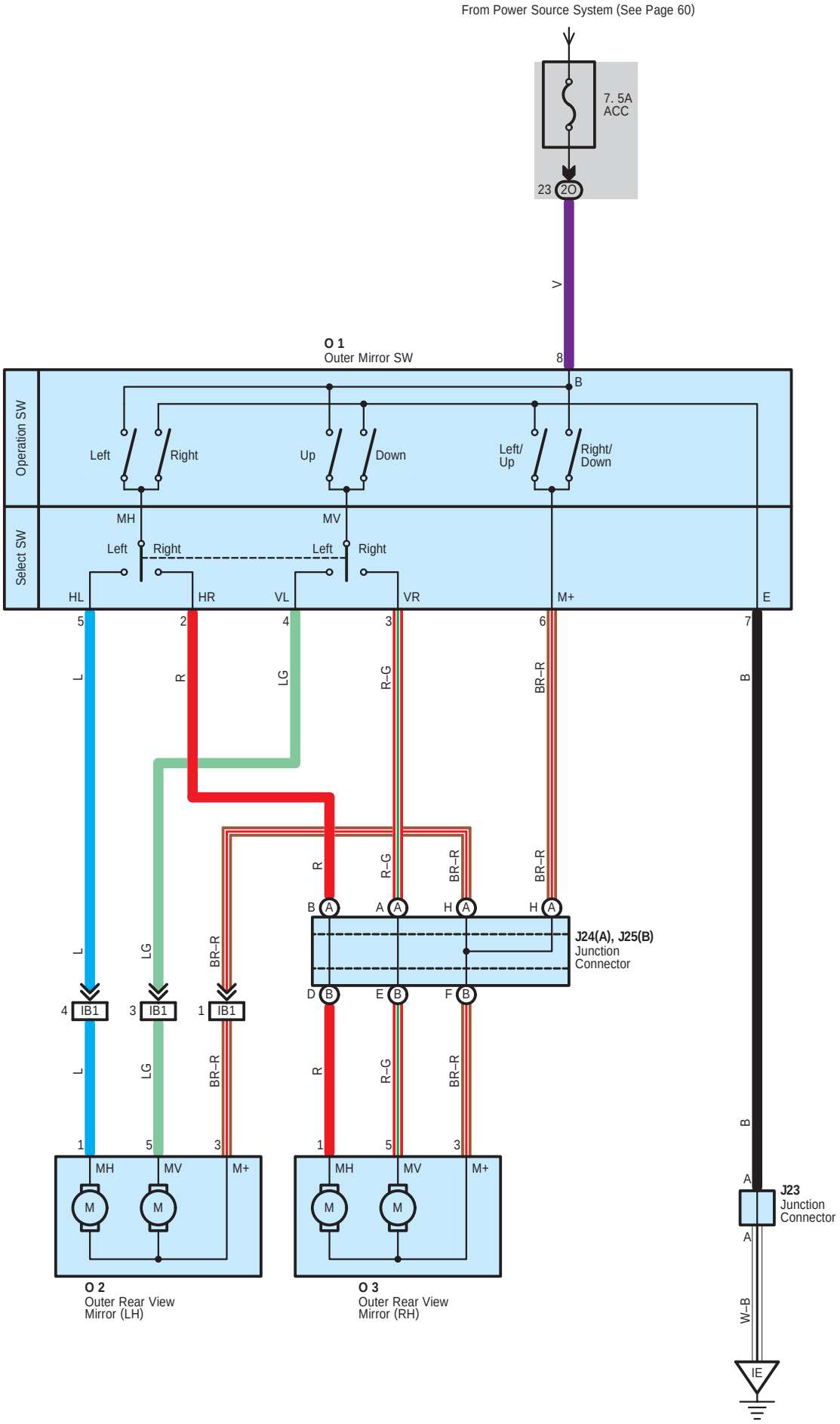

cardiagn.com

Service Hints

O1 Outer Mirror SW

8–Ground : Approx. 12 volts with the ignition SW at ACC or ON position
7–Ground : Always continuity
6–7 : Continuity with the operation SW at LEFT or UP position
8–6 : Continuity with the operation SW at RIGHT or DOWN position

: Parts Location

Code		See Page	Code	See Page	Code	See Page
J23		38	O2	40 (Double Cab)	O3	42 (Extra Cab)
J24	A	38		42 (Extra Cab)		44 (Single Cab)
J25	B	38		44 (Single Cab)		
O1		39	O3	40 (Double Cab)		

: Junction Block and Wire Harness Connector

Code	See Page	Junction Block and Wire Harness (Connector Location)
2O	29	Instrument Panel Wire and Driver Side J/B (Instrument Panel Brace RH)

: Connector Joining Wire Harness and Wire Harness

Code	See Page	Joining Wire Harness and Wire Harness (Connector Location)
IB1	48	Front Door LH Wire and Instrument Panel Wire (Left Kick Panel)

: Ground Points

Code	See Page	Ground Points Location
IE	48	Instrument Panel Reinforcement RH

cardiagn.com

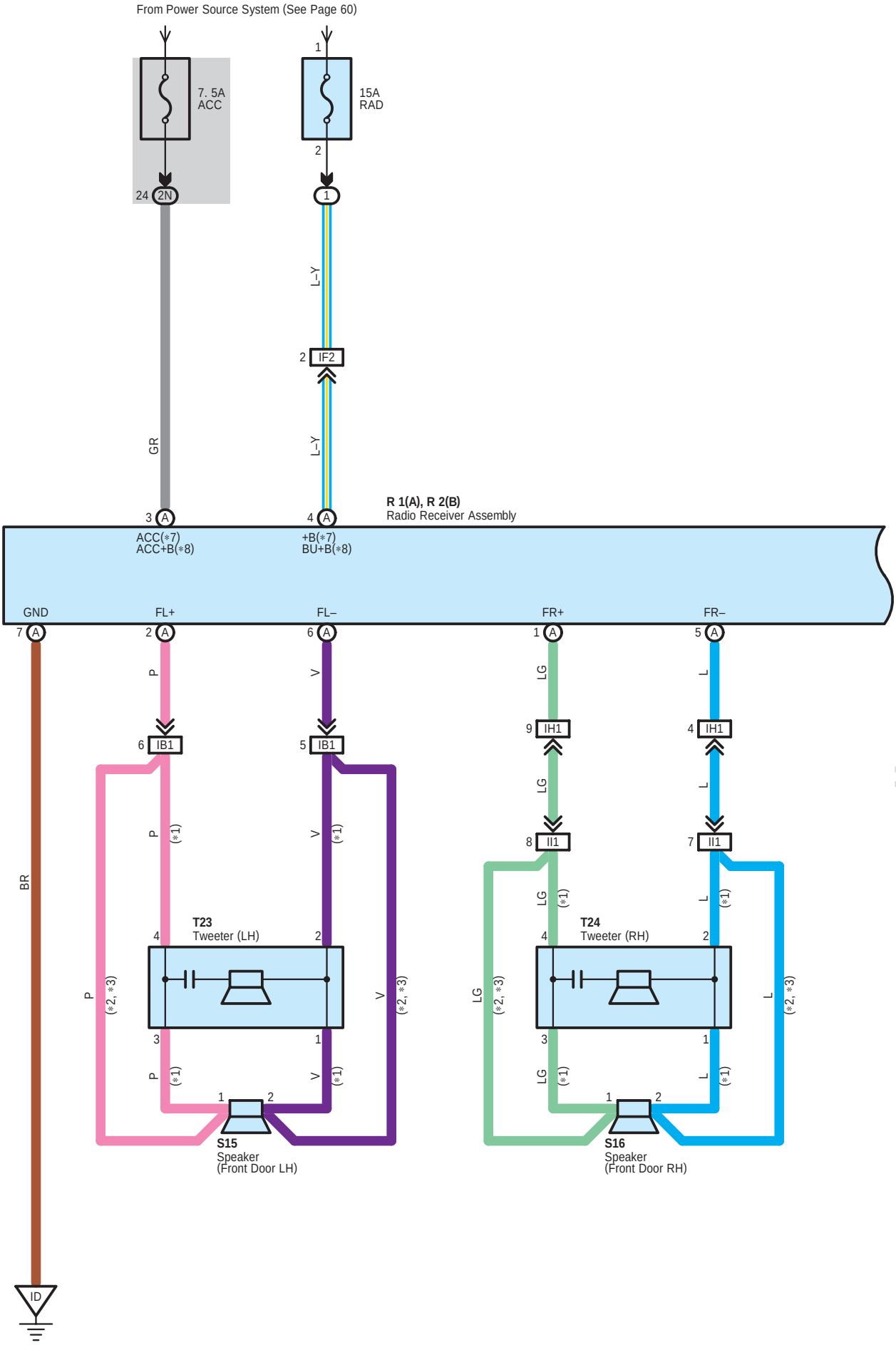

cardiagn.com

∗ 1 : 6 Speaker
∗ 2 : 4 Speaker
∗ 3 : 2 Speaker
∗ 4 : Double Cab
∗ 5 : Extra Cab
∗ 6 : 6 Speaker, 4 Speaker
∗ 7 : w/ CD Player
∗ 8 : w/o CD Player

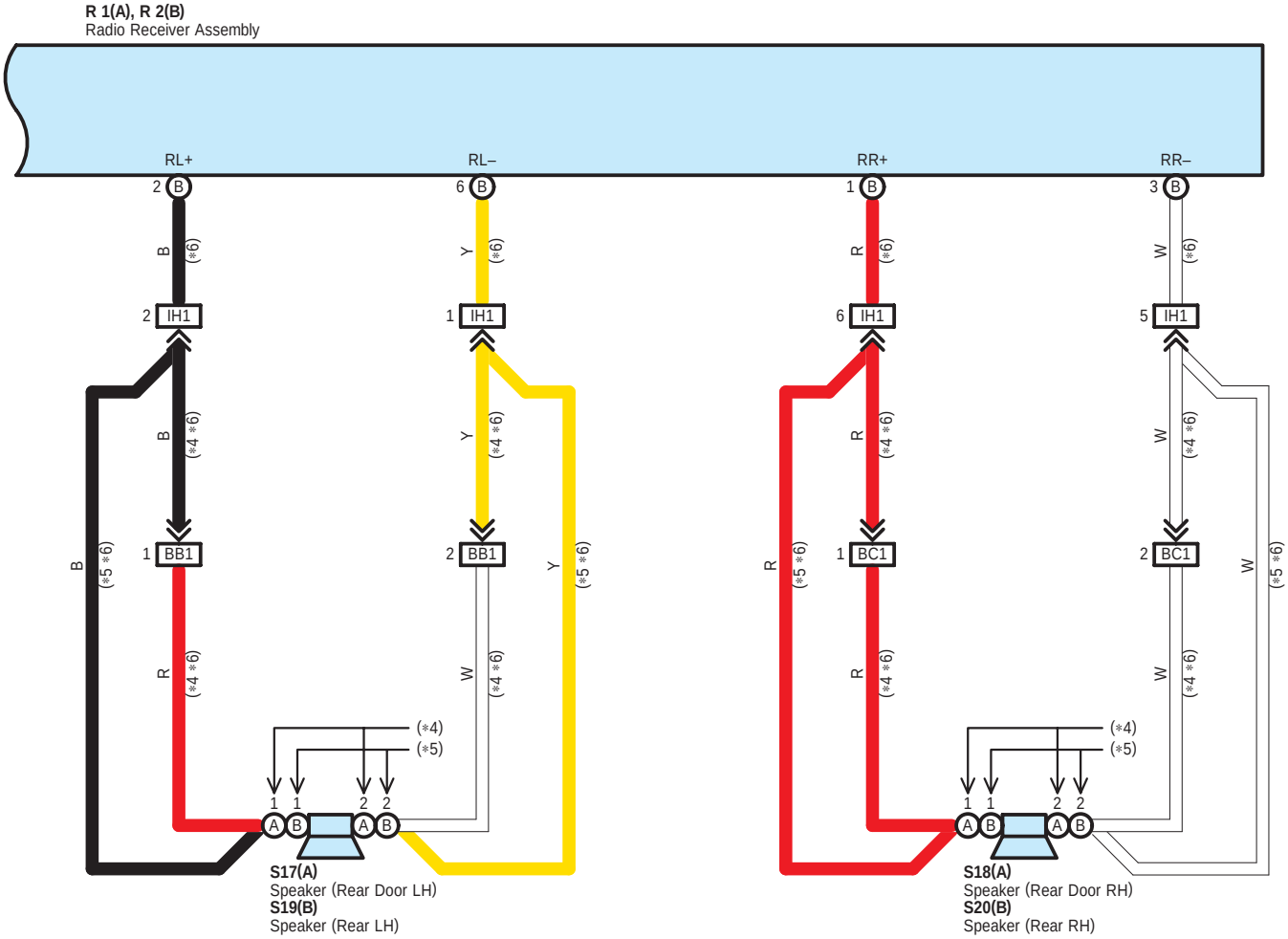

cardiagn.com

Service Hints

R1 (A) Radio Receiver Assembly
(A) 4–Ground : Always approx. 12 volts
(A) 3–Ground : Approx. 12 volts with the ignition SW at ACC or ON position
(A) 7–Ground : Always continuity

: Parts Location

Code		See Page	Code		See Page	Code	See Page
R1	A	39	S16		43 (Extra Cab)	T23	41 (Double Cab)
R2	B	39			45 (Single Cab)		43 (Extra Cab)
S15		41 (Double Cab)	S17	A	41 (Double Cab)	T24	41 (Double Cab)
		43 (Extra Cab)	S18	A	41 (Double Cab		43 (Extra Cab)
		45 (Single Cab)	S19	B	43 (Extra Cab)		
S16		41 (Double Cab)	S20	B	43 (Extra Cab)		

: Relay Blocks

Code	See Page	Relay Blocks (Relay Block Location)
1	22	Engine Room R/B (Engine Compartment Left)

: Junction Block and Wire Harness Connector

Code	See Page	Junction Block and Wire Harness (Connector Location)
2N	29	Instrument Panel Wire and Driver Side J/B (Instrument Panel Brace RH)

: Connector Joining Wire Harness and Wire Harness

Code	See Page	Joining Wire Harness and Wire Harness (Connector Location)
IB1	48	Front Door LH Wire and Instrument Panel Wire (Left Kick Panel)
IF2	50	Engine Room Main Wire and Instrument Panel Wire (Behind the Driver Side J/B)
IH1	50	Instrument Panel Wire and Floor Wire (Right Kick Panel)
II1	50	Front Door RH Wire and Floor Wire (Right Kick Panel)
BB1	52 (Double Cab)	Rear Door No.1 Wire LH and Floor Wire (Center Pillar LH)
BC1	52 (Double Cab)	Rear Door No.1 Wire RH and Floor Wire (Center Pillar RH)

: Ground Points

Code	See Page	Ground Points Location
ID	48	Instrument Panel Reinforcement Center

cardiagn.com

cardiagn.com

Combination Meter

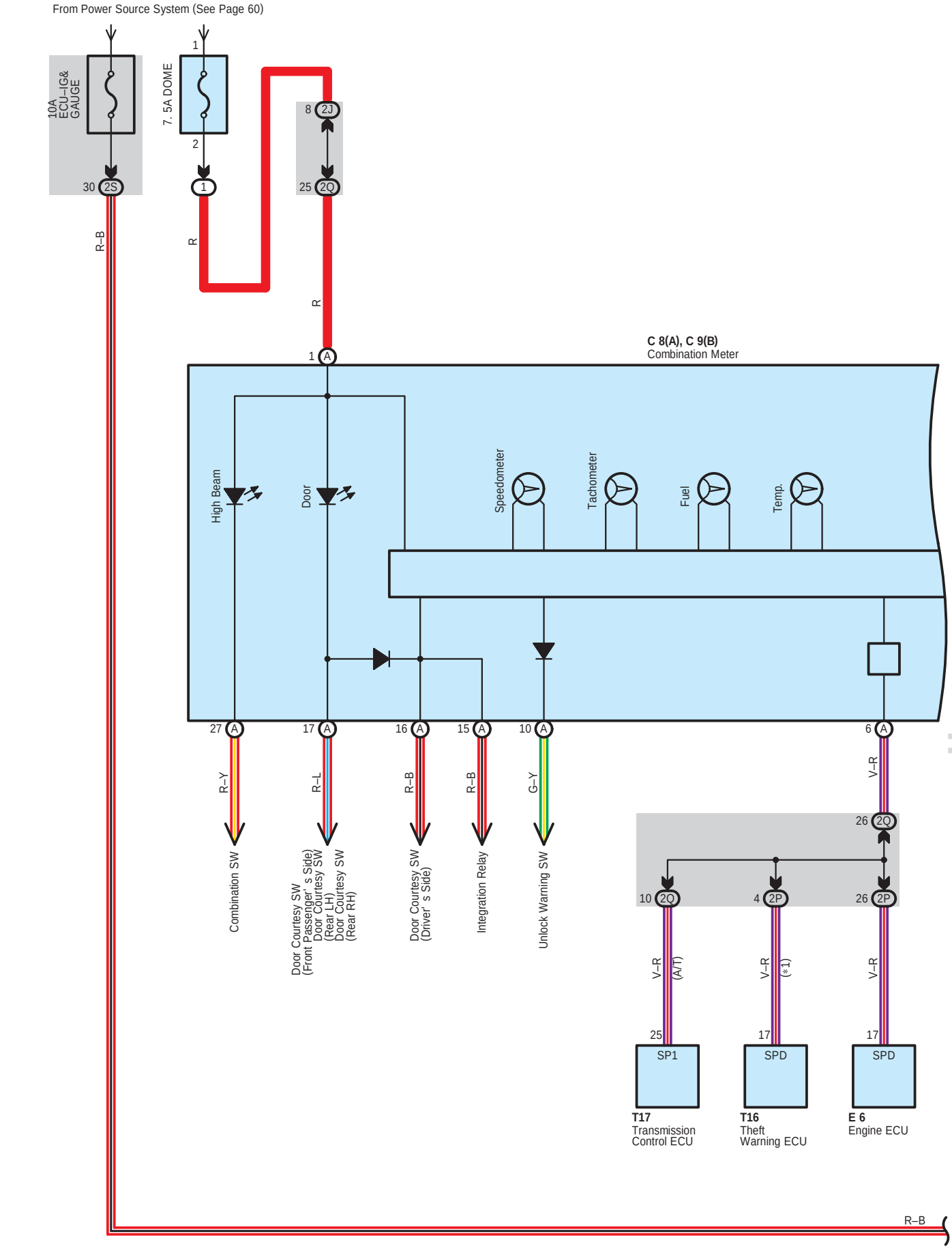

cardiagn.com

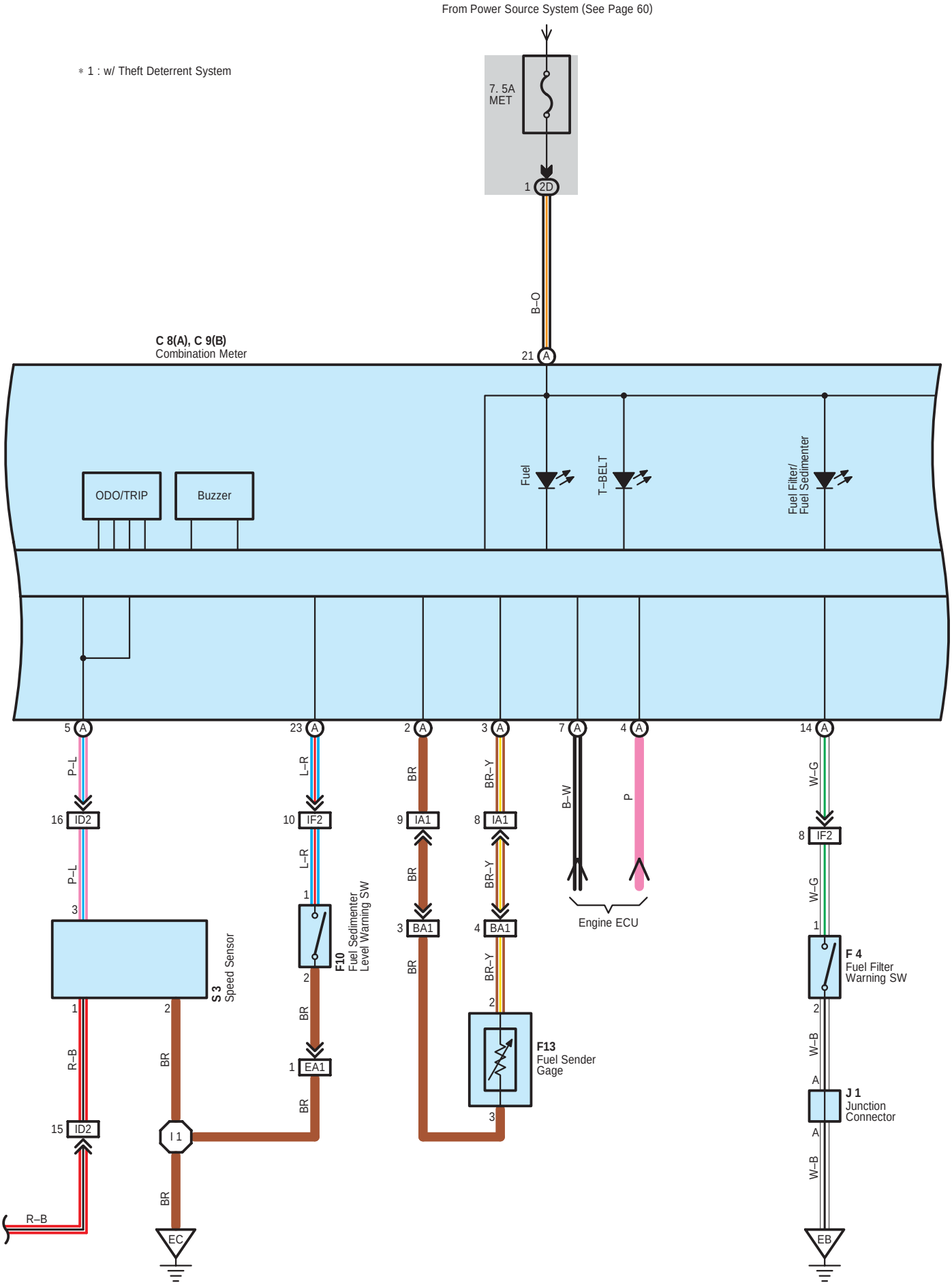

cardiagn.com

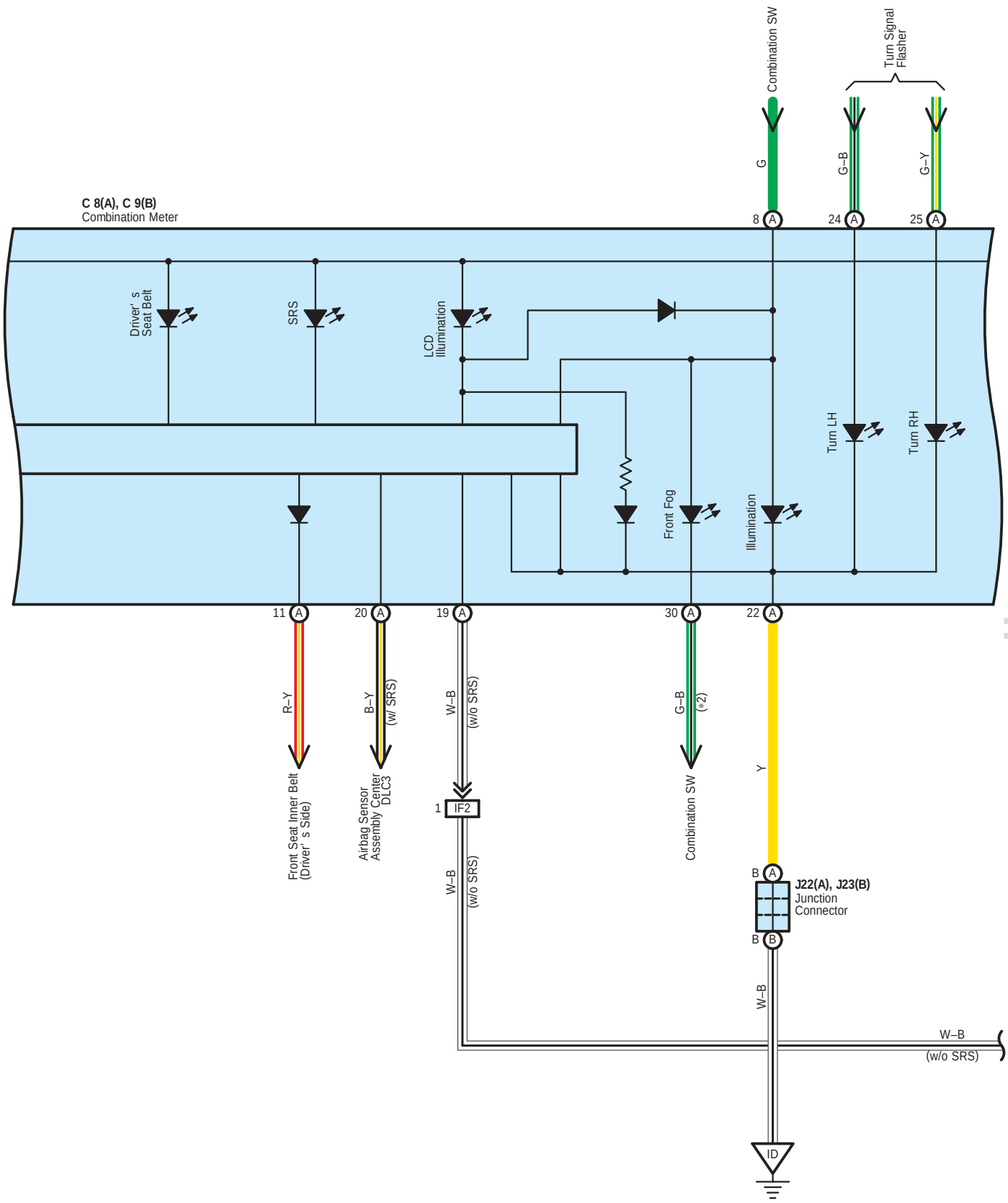

cardiagn.com

∗ 2 : w/ Front Fog Light

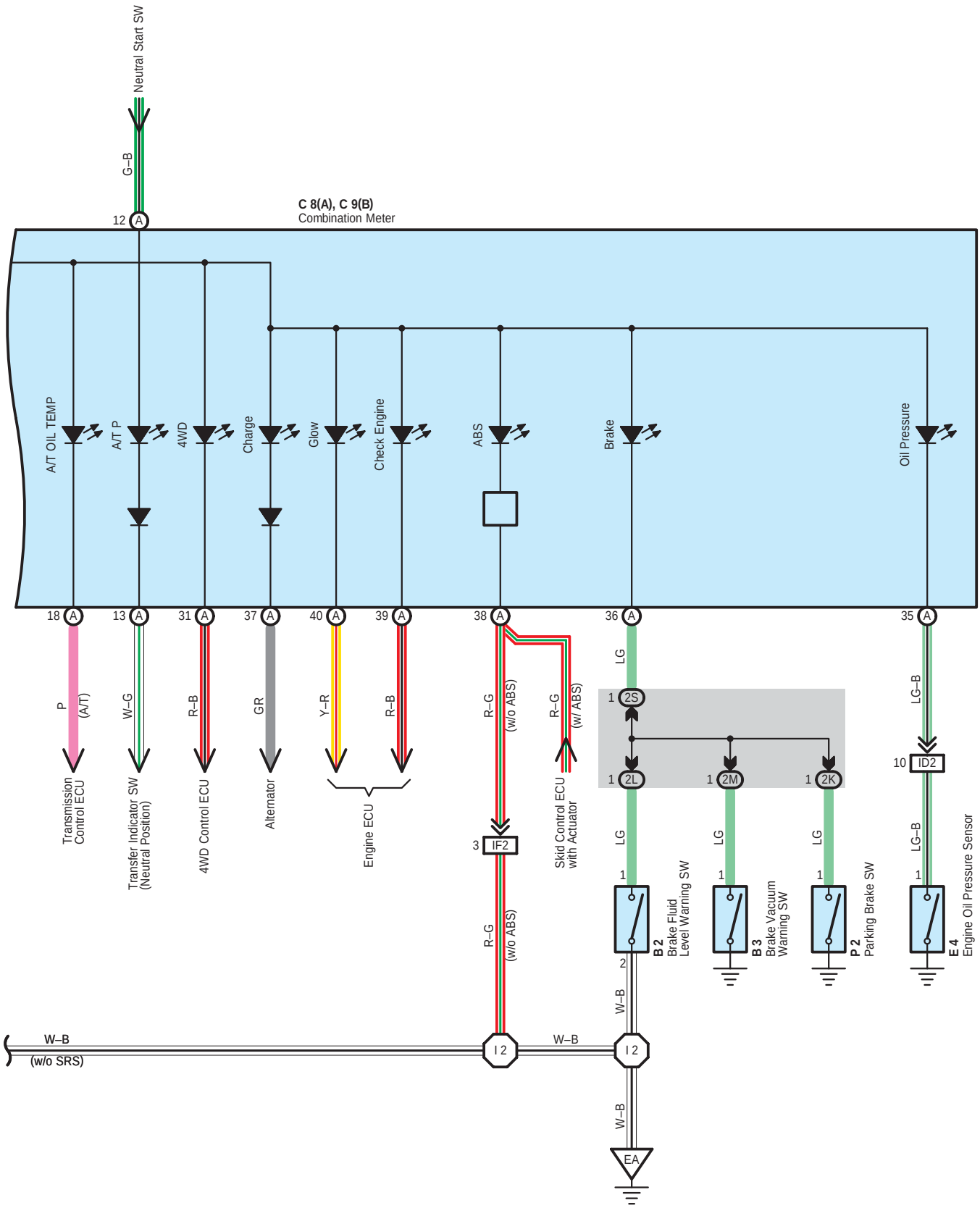

cardiagn.com

Combination Meter

Service Hints

C8 (A) Combination Meter

(A) 21–Ground : Approx. 12 volts with the ignition SW at ON position
(A) 1–Ground : Always approx. 12 volts
(A) 22–Ground : Always continuity

F13 Fuel Sender Gage

2–3 : Approx. 4 Ω with the fuel full
Approx. 110 Ω with the fuel empty

: Parts Location

Code		See Page	Code	See Page	Code		See Page
B2		36	F4	36	J22	A	38
B3		36	F10	36	J23	B	38
C8	A	38	F13	40 (Double Cab)	P2		39
C9	B	38		42 (Extra Cab)	S3		37
E4		36		44 (Single Cab)	T16		39
E6		38	J1	37	T17		39

: Relay Blocks

Code	See Page	Relay Blocks (Relay Block Location)
1	22	Engine Room R/B (Engine Compartment Left)

: Junction Block and Wire Harness Connector

Code	See Page	Junction Block and Wire Harness (Connector Location)
2D	28	Instrument Panel Wire and Driver Side J/B (Instrument Panel Brace RH)
2J	28	Engine Room Main Wire and Driver Side J/B (Instrument Panel Brace RH)
2K	28	Floor Wire and Driver Side J/B (Instrument Panel Brace RH)
2L	28	Engine Room Main Wire and Driver Side J/B (Instrument Panel Brace RH)
2M		
2P	29	Instrument Panel Wire and Driver Side J/B (Instrument Panel Brace RH)
2Q		
2S		

: Connector Joining Wire Harness and Wire Harness

Code	See Page	Joining Wire Harness and Wire Harness (Connector Location)
EA1	46	Engine Wire and Engine Room Main Wire (Inside of Engine Room R/B and Engine Room J/B)
IA1	48	Instrument Panel Wire and Floor Wire (Left Kick Panel)
ID2	48	Engine Wire and Instrument Panel Wire (Behind the Glove Box)
IF2	50	Engine Room Main Wire and Instrument Panel Wire (Behind the Driver Side J/B)
BA1	52 (Double Cab)	Frame Wire and Floor Wire (Under the Front Seat LH)
	54 (Extra Cab)	
	56 (Single Cab)	

: Ground Points

Code	See Page	Ground Points Location
EA	46	Right Side of the Fender Apron
EB	46	Left Side of the Fender Apron
EC	46	Rear Side of the Cylinder Block
ID	48	Instrument Panel Reinforcement Center

: Splice Points

Code	See Page	Wire Harness with Splice Points	Code	See Page	Wire Harness with Splice Points
I1	50	Engine Wire	I2	50	Engine Wire

cardiagn.com

cardiagn.com

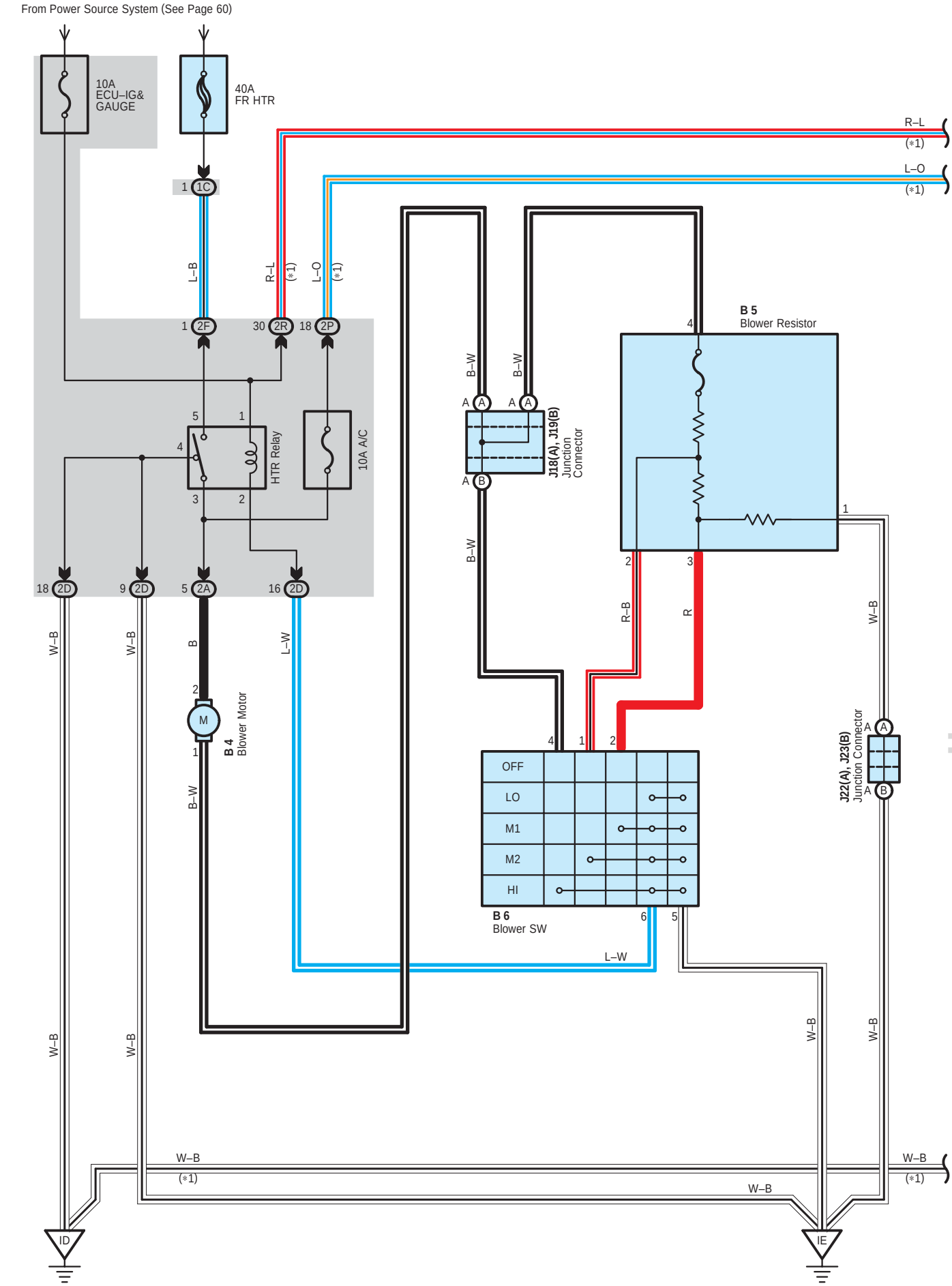

cardiagn.com

∗ 1 : w/ Front Cooler

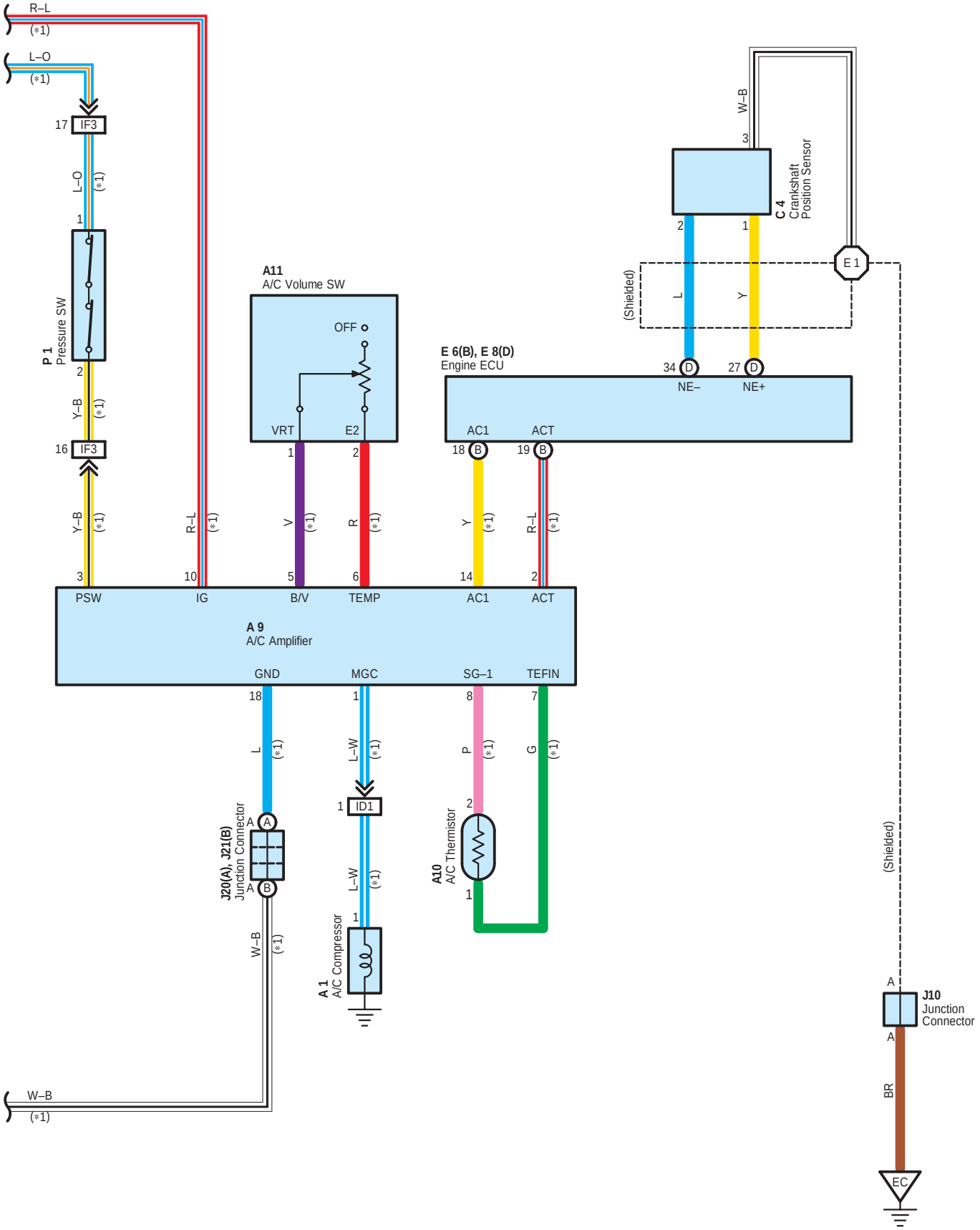

cardiagn.com

System Outline

Current is applied at all times through the FR HTR fuse to TERMINAL 5 of the HTR relay.
When the ignition SW is turned on, the current flows through the ECU–IG&GAUGE fuse to TERMINAL 1 of the HTR relay to TERMINAL 2 to TERMINAL 6 of the blower SW.

Blower Motor Operation

* Low speed operation
  When the blower SW is moved to LO position, the current flows to TERMINAL 6 of the blower SW to TERMINAL 5 to GROUND, causing the HTR relay to turn on. This causes the current flows from the FR HTR fuse to TERMINAL 5 of the HTR relay to TERMINAL 3 to TERMINAL 2 of the blower motor to TERMINAL 1 to TERMINAL 4 of the blower resistor to TERMINAL 1 to GROUND, rotating the blower motor at low speed.

* Medium speed operation (Operation at M1, M2)
  When the blower SW is moved to M1 position, the current flows to TERMINAL 6 of the blower SW to TERMINAL 5 to GROUND, causing the HTR relay to turn on. This causes the current flows from the FR HTR fuse to TERMINAL 5 of the HTR relay to TERMINAL 3 to TERMINAL 2 of the blower motor to TERMINAL 1 to TERMINAL 4 of the blower resistor to TERMINAL 3 to TERMINAL 2 of the blower SW to TERMINAL 5 to GROUND. At this time, the blower resistance of the blower resistor is smaller than at low speed, so the blower motor rotates at medium low speed.
  When the blower SW is moved to M2 position, the current flows through the HTR relay to TERMINAL 2 of the blower motor to TERMINAL 1 to TERMINAL 4 of the blower resistor to TERMINAL 2 to TERMINAL 1 of the blower SW to TERMINAL 5 to GROUND. At this time, resistance of the blower resistor is smaller than at M1 position, so the blower motor rotates at medium high speed.

* High speed operation
  When the blower SW is moved to HI position, the current flows to TERMINAL 6 of the blower SW to TERMINAL 5 to GROUND, causing the HTR relay to turn on.
  This causes the current flows from the FR HTR fuse to TERMINAL 5 of the HTR relay to TERMINAL 3 to TERMINAL 2 of the blower motor to TERMINAL 1 to TERMINAL 4 of the blower SW to TERMINAL 5 to GROUND, rotating the blower motor at high speed.

Service Hints

HTR Relay

5–3 : Closed with the ignition SW at ON position and the blower SW on

P1 Pressure SW

1–2 : Open with the refrigerant pressure at less than approx. 2.0 kgf/cm^2 (28.4 psi, 196.1 kpa) or more than approx. 32.0 kgf/cm^2 (455 psi, 3138.1 kpa)

A9 A/C Amplifier

10–Ground : Approx. 12 volts with the ignition SW at ON position
18–Ground : Always continuity

○ : Parts Location

Code	See Page	Code	See Page	Code	See Page
A1	36	B6	38	J19 B	38
A9	38	C4	36	J20 A	38
A10	38	E6 B	38	J21 B	38
A11	38	E8 D	38	J22 A	38
B4	38	J10	38	J23 B	38
B5	38	J18 A	38	P1	37

: Junction Block and Wire Harness Connector

Code	See Page	Junction Block and Wire Harness (Connector Location)
1C	23	Engine Room Main Wire and Engine Room J/B (Engine Compartment Left)
2A	28	Instrument Panel Wire and Driver Side J/B (Instrument Panel Brace RH)
2D		
2F	28	Engine Room Main Wire and Driver Side J/B (Instrument Panel Brace RH)
2P	29	Instrument Panel Wire and Driver Side J/B (Instrument Panel Brace RH)
2R		

cardiagn.com

: **Connector Joining Wire Harness and Wire Harness**

Code	See Page	Joining Wire Harness and Wire Harness (Connector Location)
ID1	48	Engine Wire and Instrument Panel Wire (Behind the Glove Box)
IF3	50	Engine Room Main Wire and Instrument Panel Wire (Behind the Driver Side J/B)

: **Ground Points**

Code	See Page	Ground Points Location
EC	46	Rear Side of the Cylinder Block
ID	48	Instrument Panel Reinforcement Center
IE	48	Instrument Panel Reinforcement RH

: **Splice Points**

Code	See Page	Wire Harness with Splice Points	Code	See Page	Wire Harness with Splice Points
E1	46	Engine Wire			

cardiagn.com

I GROUND POINT

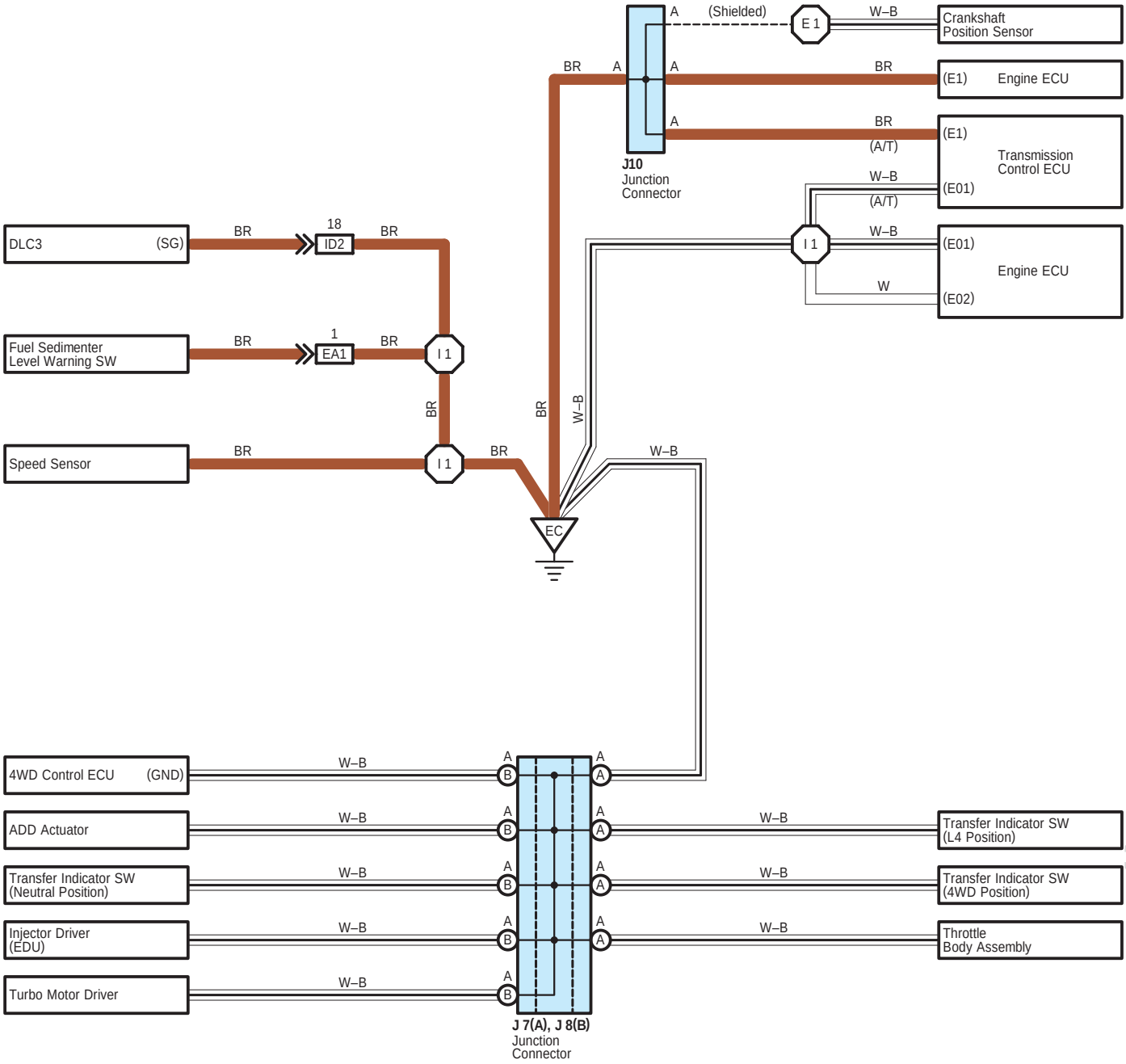

cardiagn.com

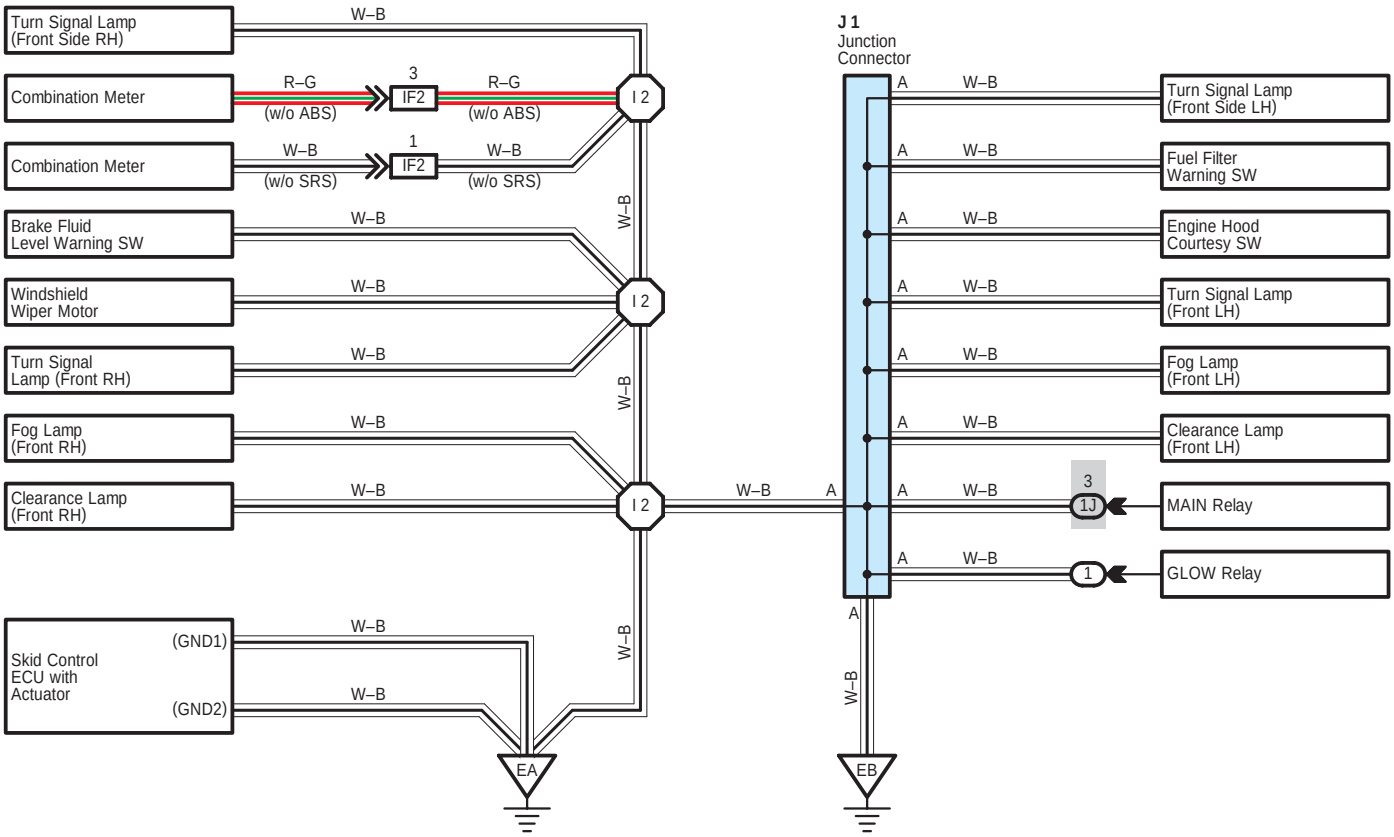

cardiagn.com

I GROUND POINT

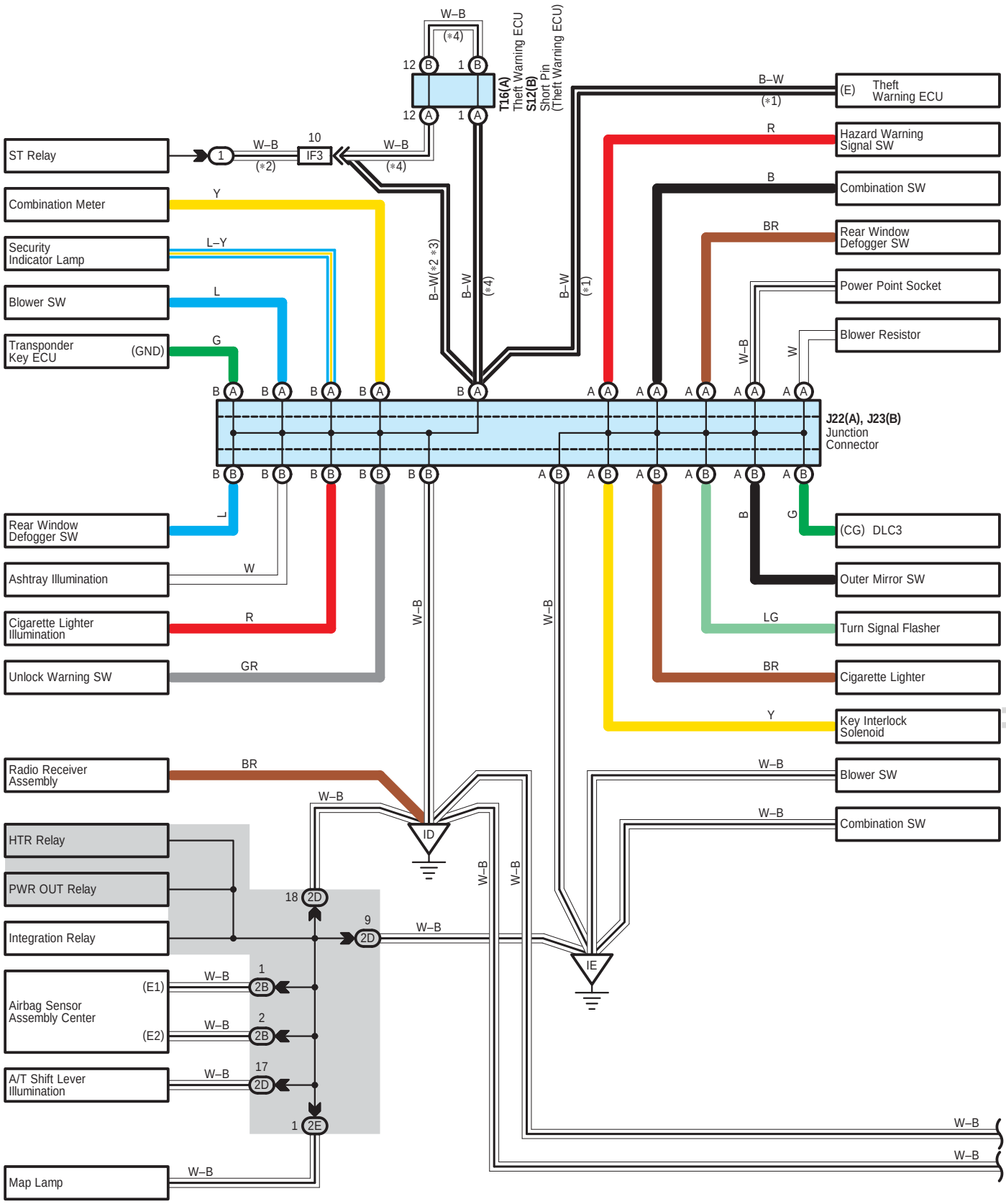

cardiagn.com

∗ 1 : w/ Theft Deterrent System
∗ 2 : w/o Theft Deterrent System
∗ 3 : M/T Single Cab, Double Cab 2KD–FTV w/o Inter Cooler
∗ 4 : ∗ 2 Except ∗3

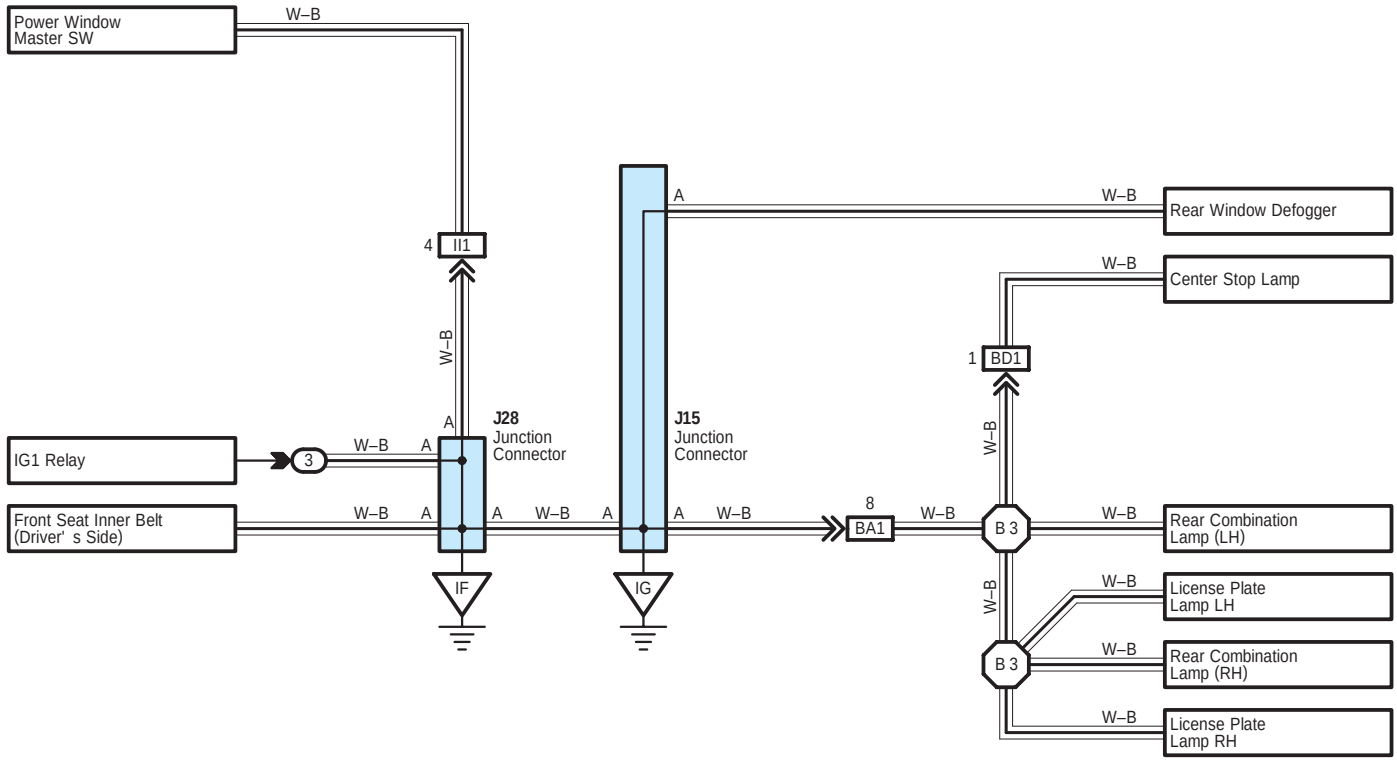

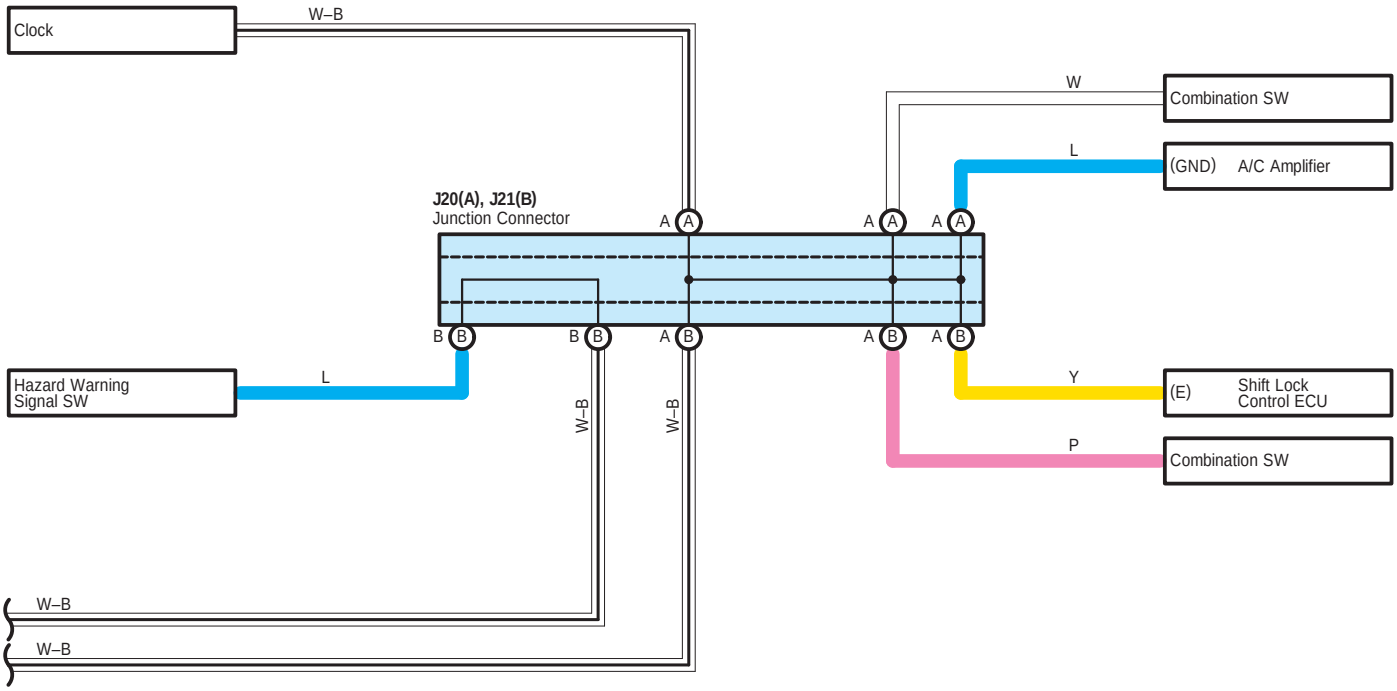

cardiagn.com

I GROUND POINT

: Parts Location

Code		See Page	Code		See Page	Code		See Page
J1		37	J15		38	J23	B	38
J7	A	38	J20	A	38	J28		38
J8	B	38	J21	B	38	S12	B	39
J10		38	J22	A	38	T16	A	39

: Relay Blocks

Code	See Page	Relay Blocks (Relay Block Location)
1	22	Engine Room R/B (Engine Compartment Left)
3	35	R/B No.3 (Cowl Side Panel LH)

: Junction Block and Wire Harness Connector

Code	See Page	Junction Block and Wire Harness (Connector Location)
1J	24	Engine Room Main Wire and Engine Room J/B (Engine Compartment Left)
2B	28	Instrument Panel Wire and Driver Side J/B (Instrument Panel Brace RH)
2D		
2E		

: Connector Joining Wire Harness and Wire Harness

Code	See Page	Joining Wire Harness and Wire Harness (Connector Location)
EA1	46	Engine Wire and Engine Room Main Wire (Inside of Engine Room R/B and Engine Room J/B)
ID2	48	Engine Wire and Instrument Panel Wire (Behind the Glove Box)
IF2	50	Engine Room Main Wire and Instrument Panel Wire (Behind the Driver Side J/B)
IF3		
II1	50	Front Door RH Wire and Floor Wire (Right Kick Panel)
BA1	52 (Double Cab)	Frame Wire and Floor Wire (Under the Front Seat LH)
	54 (Extra Cab)	
	56 (Single Cab)	
BD1	52 (Double Cab)	Frame No.2 Wire and Frame Wire (Under the Back Panel LH)
	54 (Extra Cab)	
	56 (Single Cab)	

: Ground Points

Code	See Page	Ground Points Location
EA	46	Right Side of the Fender Apron
EB	46	Left Side of the Fender Apron
EC	46	Rear Side of the Cylinder Block
ID	48	Instrument Panel Reinforcement Center
IE	48	Instrument Panel Reinforcement RH
IF	48	Cowl Side Panel RH
IG	48	Cowl Side Panel LH

: Splice Points

Code	See Page	Wire Harness with Splice Points	Code	See Page	Wire Harness with Splice Points
E1	46	Engine Wire	B3	52 (Double Cab)	Frame Wire
I1	50			54 (Extra Cab)	
I2				56 (Single Cab)	

cardiagn.com

cardiagn.com

J POWER SOURCE (Current Flow Chart)

The chart below shows the route by which current flows from the battery to each electrical source (Fusible Link, Circuit Breaker, Fuse, etc.) and other Parts.

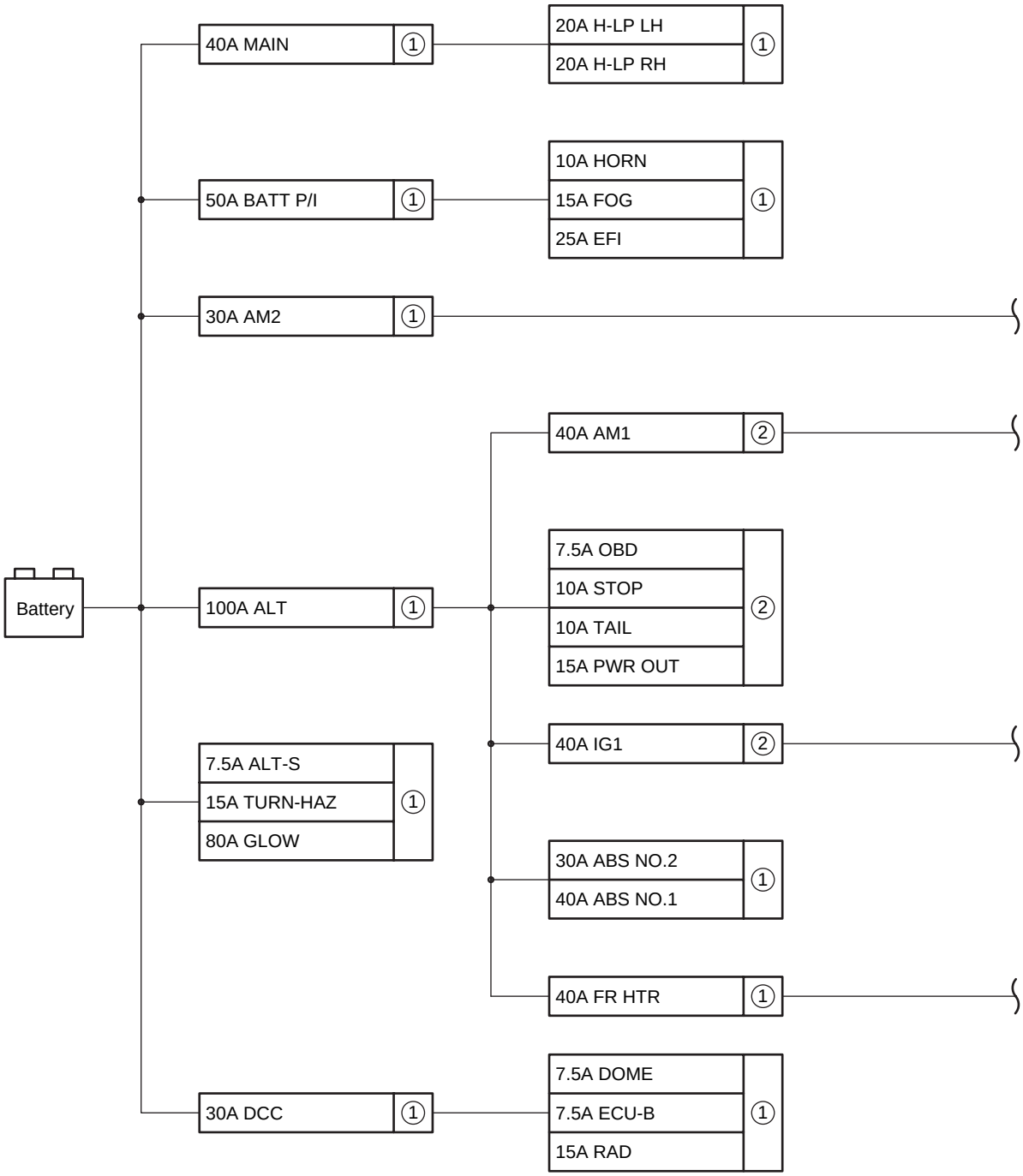

[LOCATION]

① : Engine Room R/B and Engine Room J/B (See Page 22)

② : Driver Side J/B (See Page 28)

③ : R/B No.3 (See Page 35)

cardiagn.com

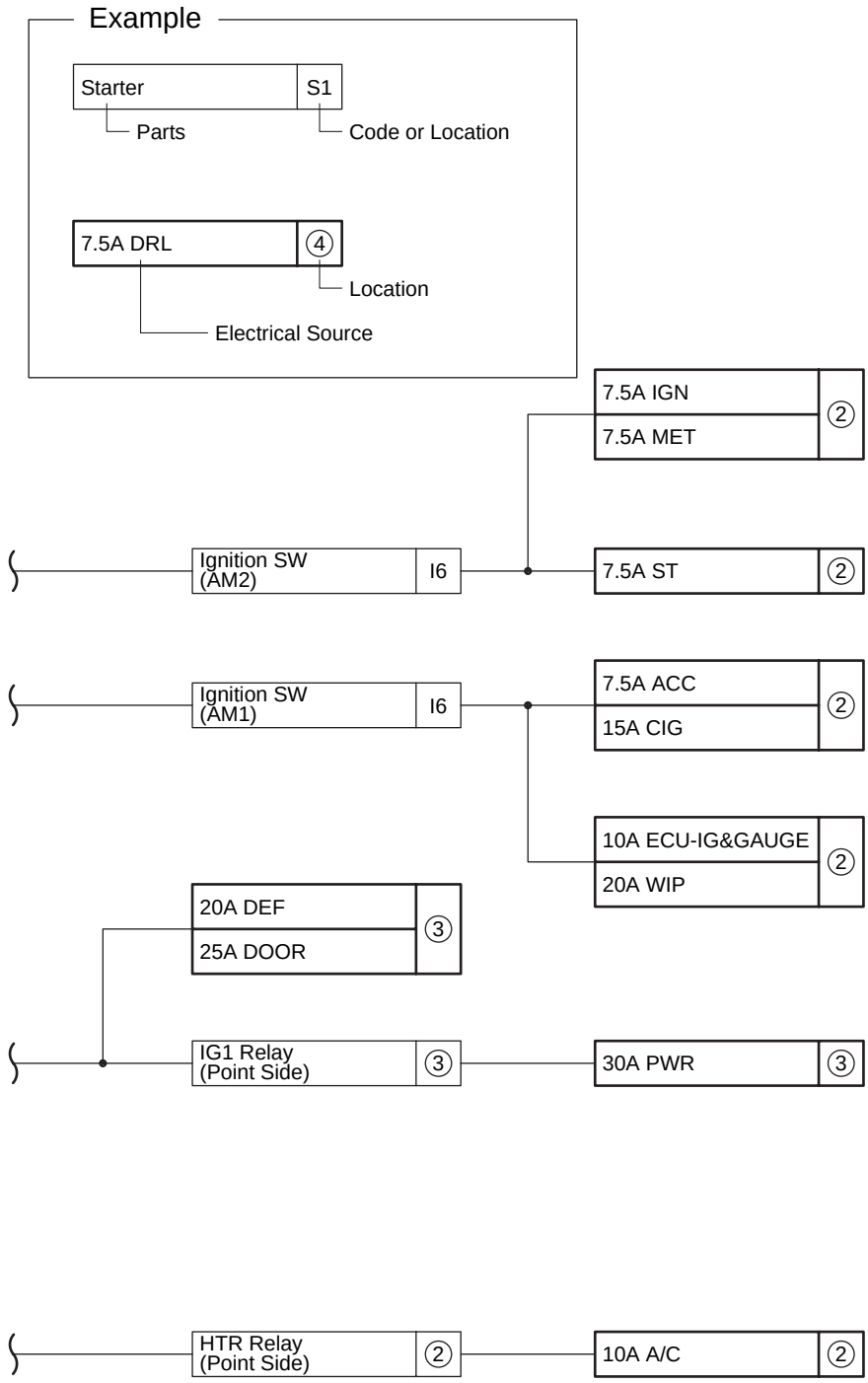

cardiagn.com

Engine Room R/B (See Page 22)

Fuse		System	Page
7.5A	ALT–S	Charging	66
7.5A	DOME	Clock	162
		Combination Meter	172
		Door Lock Cotrol	130
		ECT	108
		Engine Control	68
		Headlight	84
		Interior Light	100
		Key Reminder and Light Reminder	104
		Taillight and Illumination	88
		Theft Deterrent	144
		Wireless Door Lock Control	136
7.5A	ECU–B	Door Lock Cotrol	130
		Engine Immobilizer System	80
		Interior Light	100
		Theft Deterrent	142
		Wireless Door Lock Control	136
10A	HORN	Horn	156
		Theft Deterrent	142
15A	FOG	Front Fog Light	86
15A	RAD	Audio System	168
15A	TURN–HAZ	Turn Signal and Hazard Warning Light	92
20A	H–LP LH	Headlight	84
20A	H–LP RH	Headlight	84
25A	EFI	ECT	108
		Engine Control	68
30A	ABS NO.2	ABS	116
30A	AM2	Engine Immobilizer System	80
		Starting	64
30A	DCC	Engine Immobilizer System	80
40A	ABS NO.1	ABS	116
40A	FR HTR	Air Conditioner	178
50A	BATT P/I	ECT	108
		Engine Control	68
		Front Fog Light	86
80A	GLOW	Engine Control	68
100A	ALT	Charging	66
		4WD	124

∗ These are the page numbers of the first page on which the related system is shown.

cardiagn.com

Driver Side J/B (See Page 28)

Fuse		System	Page
7.5A	ACC	Audio System	168
		Clock	162
		Power Outlet	160
		Remote Control Mirror	166
		Shift Lock	128
7.5A	IGN	ECT	108
		Engine Control	68
		Engine Immobilizer System	80
		SRS	121
7.5A	MET	ABS	116
		Charging	66
		Combination Meter	172
		Door Lock Cotrol	130
		ECT	108
		Engine Control	68
		Key Reminder and Light Reminder	104
		Seat Belt Warning	106
		SRS	121
		Taillight and Illumination	88
		Theft Deterrent	144
		4WD	124
7.5A	OBD	Engine Control	68
7.5A	ST	ECT	108
		Engine Control	68
		Starting	64
		Theft Deterrent	142
10A	A/C	Air Conditioner	178
10A	ECU–IG&GAUGE	ABS	116
		Air Conditioner	178
		Back–Up Light	98
		Charging	66
		Combination Meter	172
		Door Lock Cotrol	130
		ECT	108
		Engine Control	68
		Rear Window Defogger	164
		Shift Lock	128
		Theft Deterrent	143
		Turn Signal and Hazard Warning Light	92
		Wireless Door Lock Control	136
10A	GAUGE&ECU–IG	4WD	124

∗ These are the page numbers of the first page on which the related system is shown.

cardiagn.com

J POWER SOURCE (Current Flow Chart)

Fuse		System	Page
10A	STOP	ABS	116
		ECT	108
		Engine Control	68
		Shift Lock	128
		Stop Light	96
10A	TAIL	Clock	162
		Front Fog Light	86
		Key Reminder and Light Reminder	104
		Taillight and Illumination	88
15A	CIG	Cigarette Lighter	158
15A	PWR OUT	Power Outlet	160
20A	WIP	Front Wiper and Washer	152
40A	AM1	4WD	124

R/B No.3 (See Page 35)

Fuse		System	Page
20A	DEF	Rear Window Defogger	164
25A	DOOR	Door Lock Cotrol	130
		Theft Deterrent	142
		Wireless Door Lock Control	136
30A	PWR	Power Window	148

cardiagn.com

∗ These are the page numbers of the first page on which the related system is shown.

cardiagn.com

K CONNECTOR LIST

A 1
Gray

A 2

A 3
Black

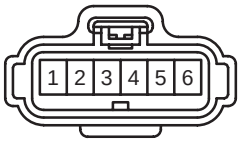

A 4
Black

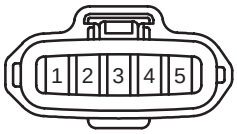

A 5
Yellow

A 6
Yellow

A 7

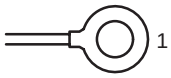

A 8
Black

A 9

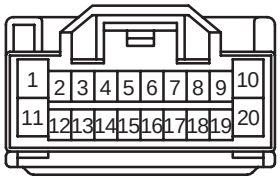

A10

A11

A12

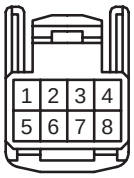

A13
Black

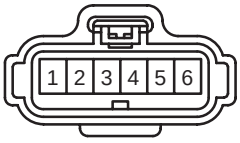

A14
Yellow

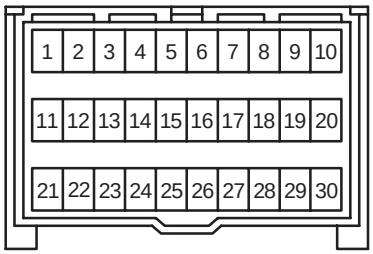

A15
Yellow

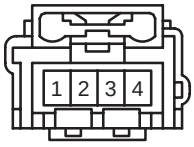

A16
Black

A17
Black

B 1
Gray

B 2
Gray

B 3
Gray

B 4
Black

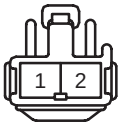

B 5
Black

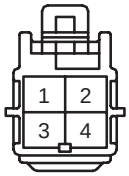

B 6

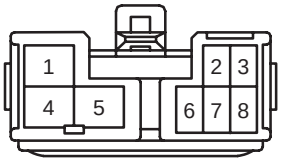

C 1
Black

C 2
Gray

C 3
Gray

C 4
Gray

C 5

C 6

C 7
Black

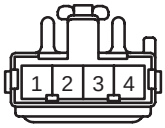

cardiagn.com

C 8

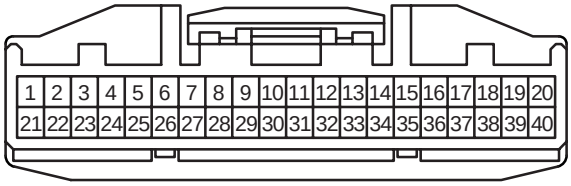

C 9

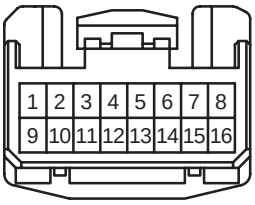

C10

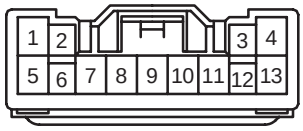

C11

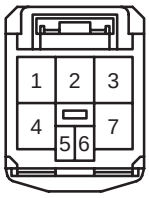

C12

C13

D 1

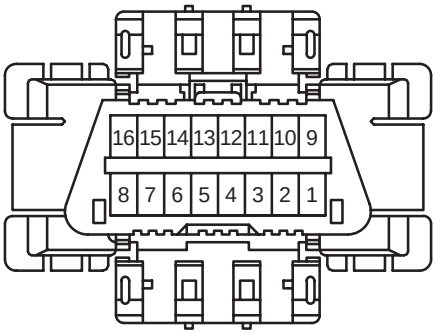

D 2

D 3

D 4

D 5

D 6

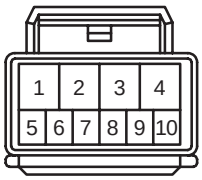

D 7

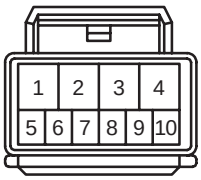

D 8

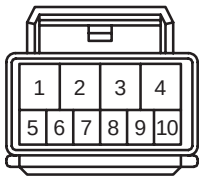

D 9

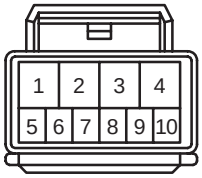

E 1
Gray

E 2
Black

E 3
Black

E 4
Black

E 5
Gray

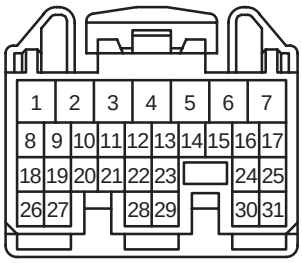

E 6
Gray

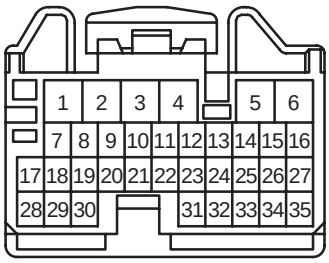

E 7
Gray

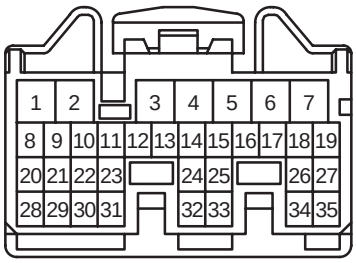

cardiagn.com

K CONNECTOR LIST

E 8
Gray

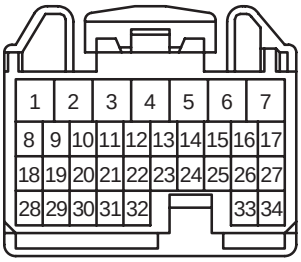

F 2
Brown

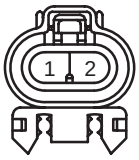

F 3
Brown

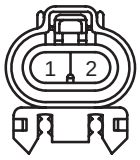

F 4
Black

F 5
Gray

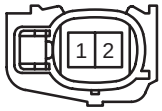

F 6
Gray

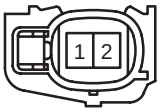

F 7
Gray

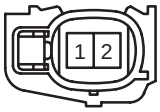

F 8
Gray

F 9
Black

F10
Gray

F11
Dark Gray

F12

F13
Black

F14
Green

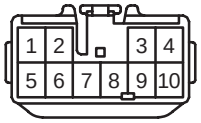

G 1

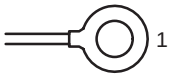

H 1
Black

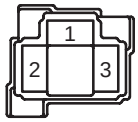

H 2
Black

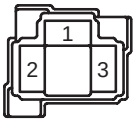

H 3
Black

H 4
Black

H 5

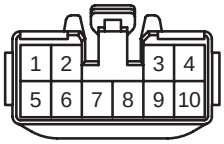

I 1
Black

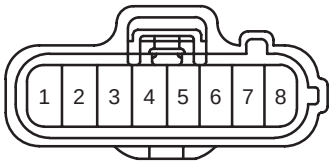

I 2
Dark Gray

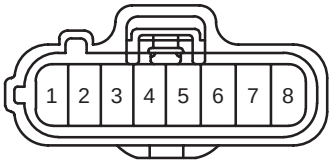

I 3
Black

I 4
Dark Gray

I 5
Black

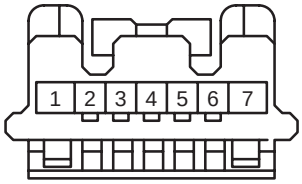

I 6

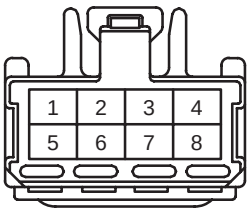

J 1

J 2

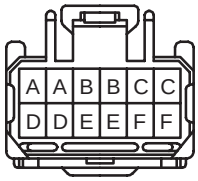

J 3

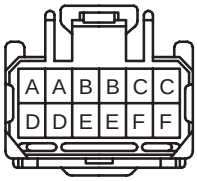

cardiagn.com

*1 : w/ Power Window
*2 : w/o Power Window

J 4
Black

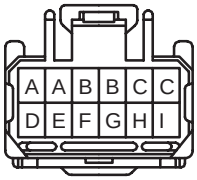

J 5

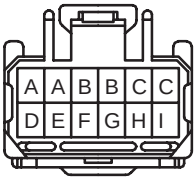

J 6

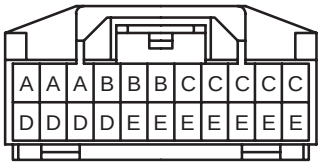

J 7
Blue

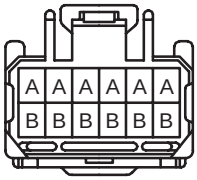

J 8
Blue

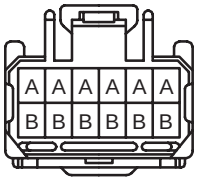

J 9

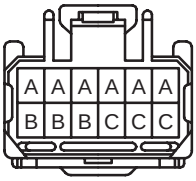

J10

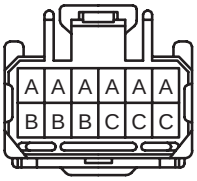

J11

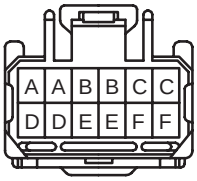

J12

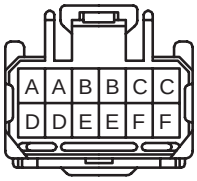

J13
Black

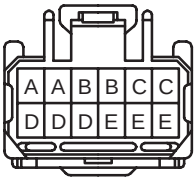

J14
Black

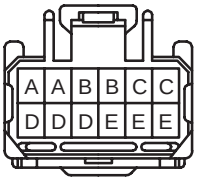

J15

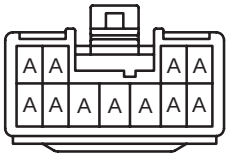

J16

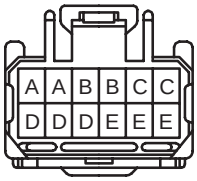

J17

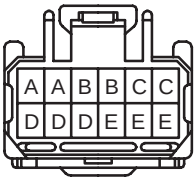

J18

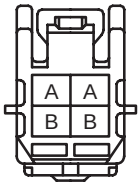

J19

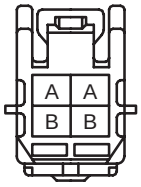

J20

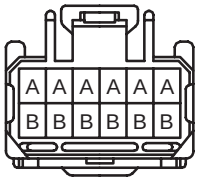

J21

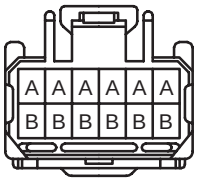

J22

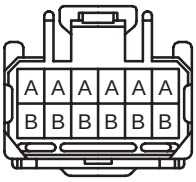

J23

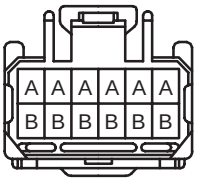

J24
(*1) Blue

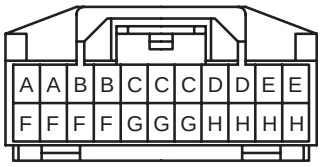

J24
(*2) Black

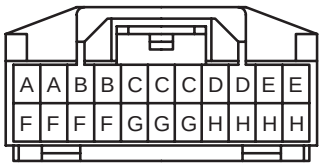

J25
(*1) Blue

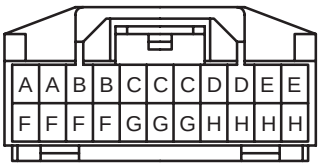

J25
(*2)

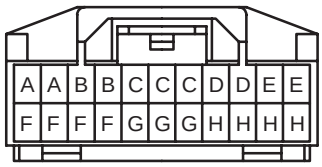

cardiagn.com

K CONNECTOR LIST

J26
Black

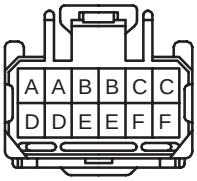

J27
Black

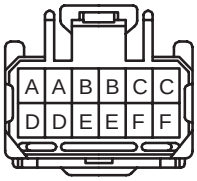

J28

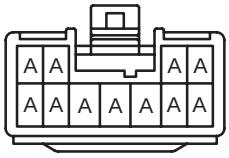

J29

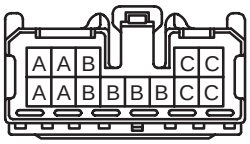

K 1
Black

L 1
Black

L 2
Black

M 1

N 1
Gray

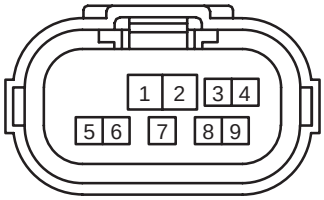

O 1

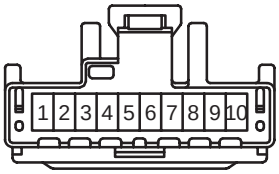

O 2

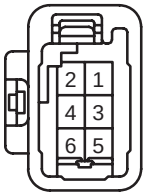

O 3

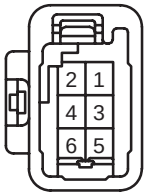

P 1
Gray

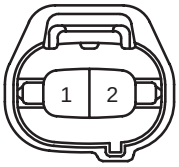

P 2
Black

P 3

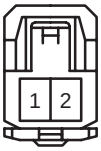

P 4
(Double Cab)

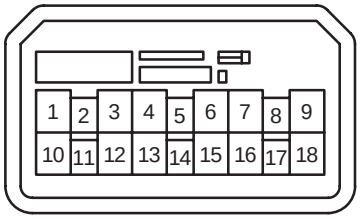

P 4
(Extra Cab)

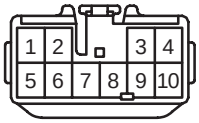

P 5
Black

P 6
Black

P 7
Black

P 8
Black

P 9
Black

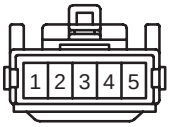

P10
Black

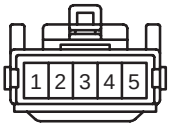

P11
Black

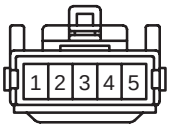

R 1

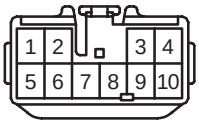

R 2

R 3
Black

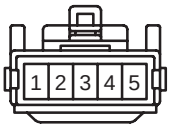

R 4

cardiagn.com

R 5
Black

R 6
Black

R 7
Black

R 8

S 1
Black

S 2
Black

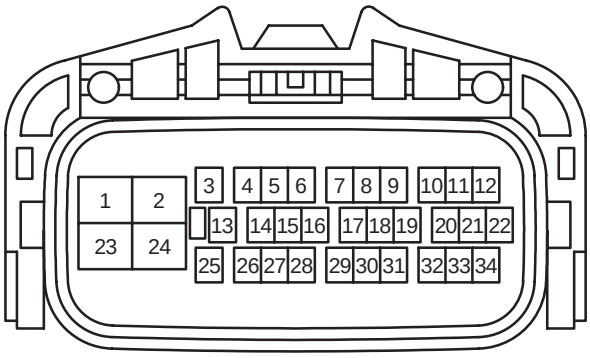

S 3
Black

S 4
Gray

S 5

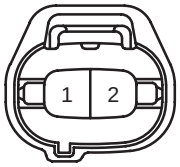

S 6
Black

S 7

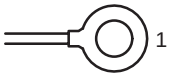

S 8
Gray

S 9
Gray

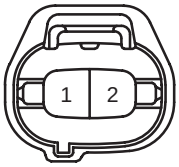

S10

S11

S12

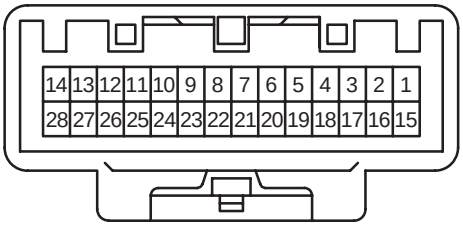

S13
Black

S14

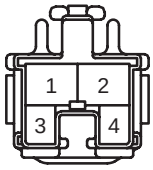

S15

S16

S17

S18

S19

S20

S21
Gray

S22
Gray

T 1
Black

T 2
Black

T 3
Blue

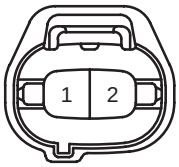

T 4
Blue

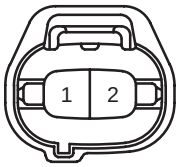

cardiagn.com

K CONNECTOR LIST

T 5
Gray

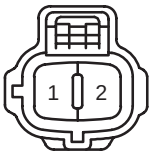

T 6
Black

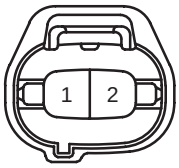

T 7
Black

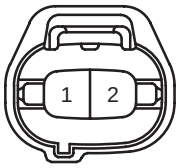

T 8
Gray

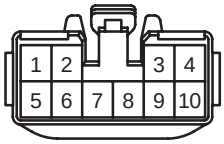

T 9
Black

T10
Black

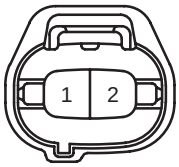

T11
Black

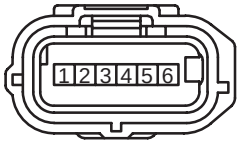

T12
Gray

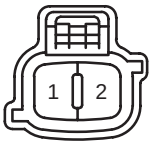

T13
Gray

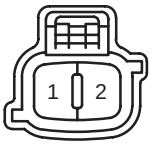

T14
Gray

T15
Gray

T16

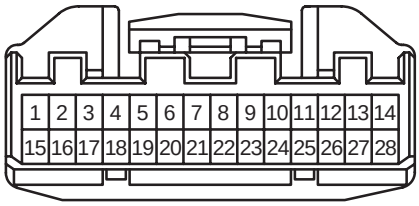

T17

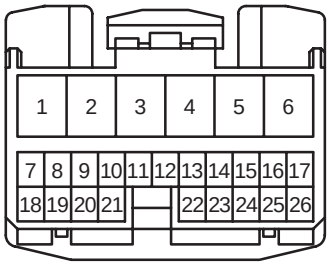

T18

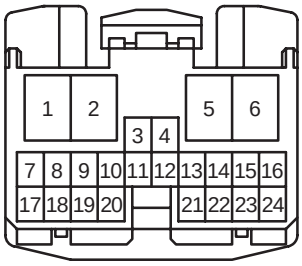

T19

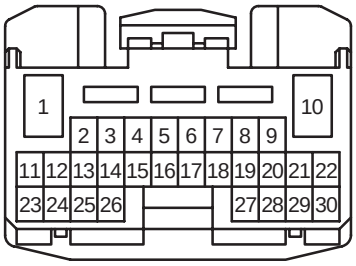

T20
Black

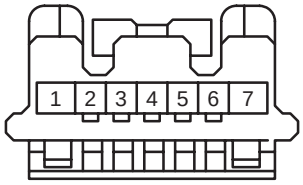

T21

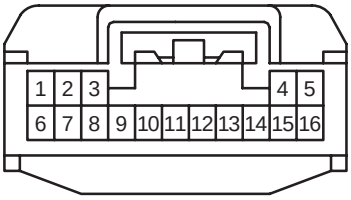

T22
Black

T23

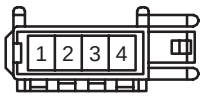

T24

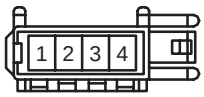

U 1

V 1
Black

V 2
Brown

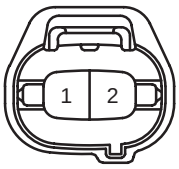

W 1
Black

W 2
Black

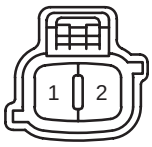

W 3
Black

cardiagn.com

cardiagn.com

L PART NUMBER OF CONNECTORS

Code	Part Name	Part Number
A 1	A/C Compressor	90980–11271
A 2	A/T Fluid Temp. Sensor	90980–11025
A 3	ADD Actuator	90980–11858
A 4	Air Flow Meter	90980–11317
A 5	Airbag Sensor (Front LH)	90980–11856
A 6	Airbag Sensor (Front RH)	
A 7	Alternator	90980–09212
A 8	Alternator	90980–11964
A 9	A/C Amplifier	90980–11971
A10	A/C Thermistor	90980–11918
A11	A/C Volume SW	90980–10906
A12	A/T Shift Lever Illumination	90980–12221
A13	Accelerator Position Sensor	90980–11858
A14	Airbag Sensor Assembly Center	90980–12391
A15	Airbag Squib (Steering Wheel Pad)	90980–12160
A16	Ashtray Illumination	90980–12111
A17	ABS Deceleration Sensor	90980–10845
B 1	Back–Up Lamp SW	90980–11250
B 2	Brake Fluid Level Warning SW	90980–11207
B 3	Brake Vacuum Warning SW	90980–11252
B 4	Blower Motor	90980–10916
B 5	Blower Resistor	90980–11136
B 6	Blower SW	90980–10877
C 1	Camshaft Position Sensor	90980–10947
C 2	Clearance Lamp (Front LH)	90980–11162
C 3	Clearance Lamp (Front RH)	
C 4	Crankshaft Position Sensor	90980–11016
C 5	Cigarette Lighter	90980–10760
C 6	Cigarette Lighter Illumination	90980–11148
C 7	Clock	90980–11013
C 8	Combination Meter	90980–12169
C 9	Combination Meter	90980–12155
C10	Combination SW	90980–12007
C11	Combination SW	90980–12358
C12	Combination SW	90980–12359
C13	Center Stop Lamp	90980–11003
D 1	DLC3	90980–11978
D 2	Door Courtesy SW (Driver's Side)	90980–10871
D 3	Door Courtesy SW (Front Passenger's Side)	
D 4	Door Courtesy SW (Rear LH)	
D 5	Door Courtesy SW (Rear RH)	
D 6	Door Lock Assembly (Driver's Side)	90980–12226
D 7	Door Lock Assembly (Front Passenger's Side)	
D 8	Door Lock Assembly (Rear LH)	
D 9	Door Lock Assembly (Rear RH)	

Code	Part Name	Part Number
E 1	ECT Solenoid	90980–10891
E 2	EGR Valve Position Sensor	90980–11143
E 3	Engine Hood Courtesy SW	90980–11003
E 4	Engine Oil Pressure Sensor	90980–11363
E 5	Engine ECU	90980–12457
E 6	Engine ECU	90980–12455
E 7	Engine ECU	90980–12454
E 8	Engine ECU	90980–12456
F 2	Fog Lamp (Front LH)	90980–11660
F 3	Fog Lamp (Front RH)	
F 4	Fuel Filter Warning SW	90980–12416
F 5	Fuel Injector (No.1)	90980–11875
F 6	Fuel Injector (No.2)	
F 7	Fuel Injector (No.3)	
F 8	Fuel Injector (No.4)	
F 9	Fuel Pressure Sensor	90980–10845
F10	Fuel Sedimenter Level Warning SW	90980–11003
F11	Fuel Temp. Sensor	90980–10737
F12	Front Seat Inner Belt (Driver's Side)	90980–11212
F13	Fuel Sender Gage	90980–11077
F14	4WD Control ECU	90980–10997
G 1	Glow Plug	99141–13004
H 1	Headlamp (LH)	90980–11314
H 2	Headlamp (RH)	
H 3	Horn (High)	90980–10619
H 4	Horn (Low)	
H 5	Hazard Warning Signal SW	90980–10801
I 1	Injector Driver (EDU)	90980–11592
I 2	Injector Driver (EDU)	90980–11593
I 3	Inlet Air Temp. Sensor (Air Cleaner)	90980–11163
I 4	Inlet Air Temp. Sensor (Inter Cooler)	90980–11025
I 5	Ignition Key Cylinder Lamp	90980–12092
I 6	Ignition SW	90980–11615
J 1	Junction Connector	90980–10803
J 2	Junction Connector	90980–11661
J 3	Junction Connector	
J 4	Junction Connector	
J 5	Junction Connector	
J 6	Junction Connector	90980–11915
J 7	Junction Connector	90980–11661
J 8	Junction Connector	
J 9	Junction Connector	
J10	Junction Connector	
J11	Junction Connector	
J12	Junction Connector	
J13	Junction Connector	

Note: Not all of the above part numbers of the connector are established for the supply.

cardiagn.com

Code	Part Name	Part Number
J14	Junction Connector	90980–11661
J15	Junction Connector	90980–10830
J16	Junction Connector	90980–11661
J17	Junction Connector	
J18	Junction Connector	90980–11742
J19	Junction Connector	
J20	Junction Connector	90980–11661
J21	Junction Connector	
J22	Junction Connector	
J23	Junction Connector	
J24	Junction Connector	90980–11915
J25	Junction Connector	
J26	Junction Connector	90980–11661
J27	Junction Connector	
J28	Junction Connector	90980–10830
J29	Junction Connector	90980–11542
K 1	Key Interlock Solenoid	90980–12063
L 1	License Plate Lamp LH	90980–11162
L 2	License Plate Lamp RH	
M 1	Map Lamp	90980–11148
N 1	Neutral Start SW	90980–12362
O 1	Outer Mirror SW	90980–11657
O 2	Outer Rear View Mirror (LH)	90980–11452
O 3	Outer Rear View Mirror (RH)	
P 1	Pressure SW	90980–11149
P 2	Parking Brake SW	90980–10871
P 3	Power Point Socket	90980–12498
P 4	Power Window Master SW (Double Cab)	90980–12122
	Power Window Master SW (Extra Cab)	90980–10997
P 5	Power Window Regulator Motor (Front LH)	90980–10797
P 6	Power Window Regulator Motor (Front RH)	
P 7	Power Window Regulator Motor (Rear LH)	90980–11900
P 8	Power Window Regulator Motor (Rear RH)	
P 9	Power Window SW (Front Passenger's Side)	90980–10789
P10	Power Window SW (Rear LH)	
P11	Power Window SW (Rear RH)	
R 1	Radio Receiver Assembly	90980–10997
R 2	Radio Receiver Assembly	90980–10996
R 3	Rear Window Defogger SW	90980–10789
R 4	Rear Combination Lamp (LH)	90980–10988
R 5	Rear Combination Lamp (RH)	
R 6	Rear Window Defogger	90980–10359
R 7	Rear Window Defogger	
R 8	Room Lamp	90980–10935
S 1	Security Horn	90980–10619
S 2	Skid Control ECU with Actuator	90980–12020

Code	Part Name	Part Number
S 3	Speed Sensor	90980–11143
S 4	Speed Sensor (Front LH)	90980–11156
S 5	Speed Sensor (Front RH)	
S 6	Starter	90980–11400
S 7	Starter	90980–09507
S 8	Suction Control Valve	90980–11285
S 9	Swirl Control Valve	90980–11156
S10	Security Indicator Lamp	90980–12063
S11	Shift Lock Control ECU	90980–12183
S12	Short Pin (Theft Warning ECU)	90980–12409
S13	Spiral Cable	90980–12183
S14	Stop Lamp SW	90980–11118
S15	Speaker (Front Door LH)	90980–10935
S16	Speaker (Front Door RH)	
S17	Speaker (Rear Door LH)	
S18	Speaker (Rear Door RH)	
S19	Speaker (Rear LH)	
S20	Speaker (Rear RH)	
S21	Speed Sensor (Rear LH)	90980–11467
S22	Speed Sensor (Rear RH)	
T 1	Throttle Body Assembly	90980–11145
T 2	Throttle Body Assembly	90980–11261
T 3	Transfer Indicator SW (4WD Position)	90980–11156
T 4	Transfer Indicator SW (L4 Position)	
T 5	Transfer Indicator SW (Neutral Position)	90980–10923
T 6	Transmission Revolution Sensor (Input)	90980–11156
T 7	Transmission Revolution Sensor (Output)	
T 8	Turbo Motor Driver	90980–10801
T 9	Turbo Pressure Sensor	90980–10845
T10	Turbocharger Variable Nozzle Motor	90980–11156
T11	Turbocharger Variable Nozzle Sensor	90980–12303
T12	Turn Signal Lamp (Front LH)	90980–11019
T13	Turn Signal Lamp (Front RH)	
T14	Turn Signal Lamp (Front Side LH)	90980–11162
T15	Turn Signal Lamp (Front Side RH)	
T16	Theft Warning ECU	90980–12410
T17	Transmission Control ECU	90980–12150
T18	Transmission Control ECU	90980–12149
T19	Transmission Control ECU	90980–12151
T20	Transponder Key Amplifier	90980–12092
T21	Transponder Key ECU	90980–12423
T22	Turn Signal Flasher	90980–10799
T23	Tweeter (LH)	90980–12304
T24	Tweeter (RH)	
U 1	Unlock Warning SW	90980–12063
V 1	VRV (EGR)	90980–11162

cardiagn.com

L PART NUMBER OF CONNECTORS

Code	Part Name	Part Number	Code	Part Name	Part Number
V 2	VSV (EGR Cut Valve)	90980–11149			
W 1	Water Temp. Sensor	90980–10735			
W 2	Windshield Washer Motor	90980–11019			
W 3	Windshield Wiper Motor	90980–11599			

Note: Not all of the above part numbers of the connector are established for the supply.

cardiagn.com

Code	Part Name	Part Number	Code	Part Name	Part Number

cardiagn.com

HOW TO READ THIS SECTION

* The system shown here is an EXAMPLE ONLY. It is different to the actual circuit shown in the wiring diagram section.

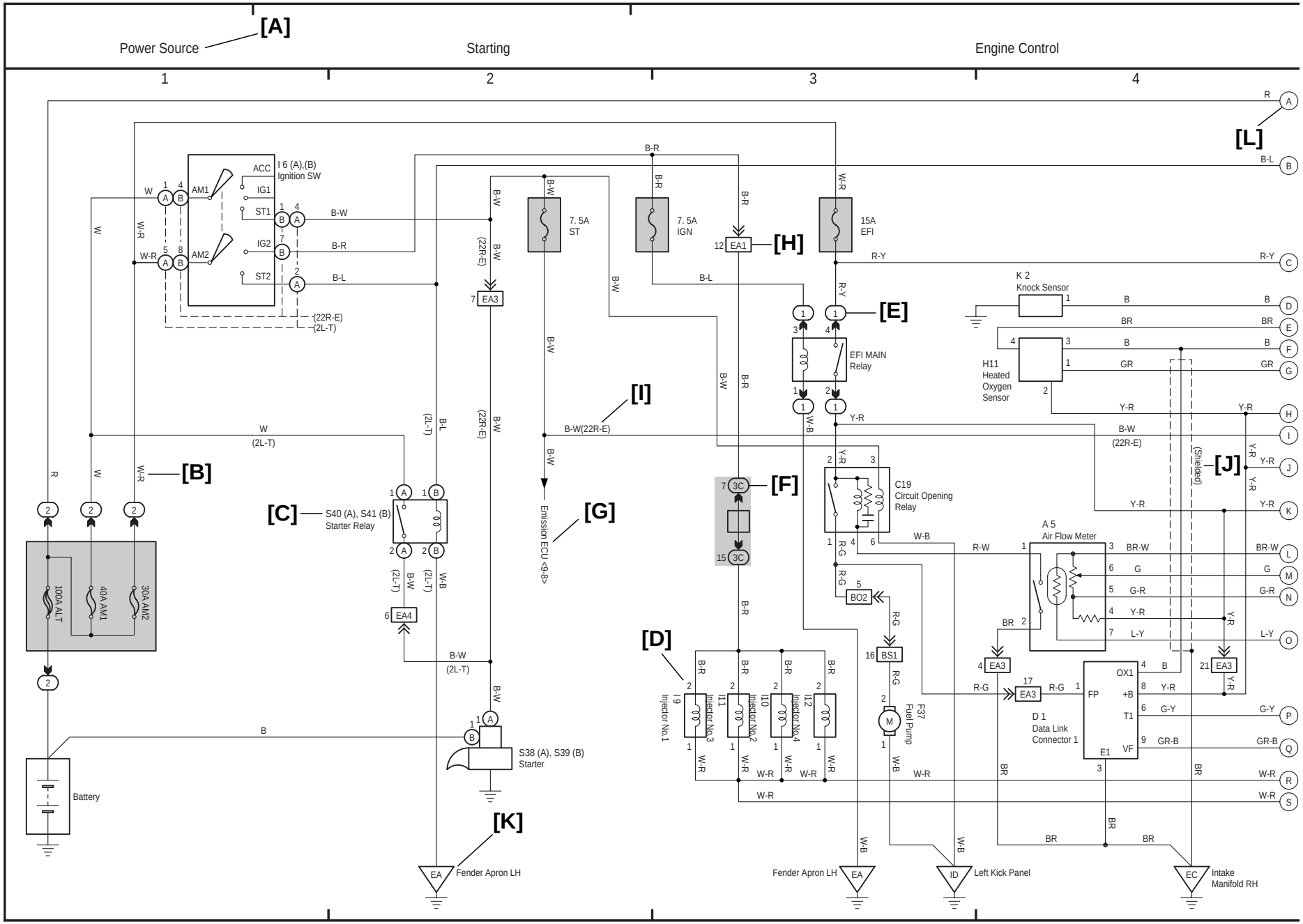

cardiagn.com

[A] : System Title

[B] : Indicates the wiring color.

Wire colors are indicated by an alphabetical code.

B = Black	W = White	BR = Brown
L = Blue	V = Violet	SB = Sky Blue
R = Red	G = Green	LG = Light Green
P = Pink	Y = Yellow	GR = Gray
O = Orange		

The first letter indicates the basic wire color and the second letter indicates the color of the stripe.

Example: L – Y

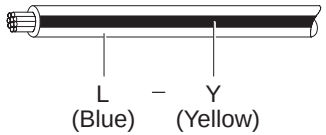

[C] : The position of the parts is the same as shown in the wiring diagram and wire routing.

[D] : Indicates the pin number of the connector. The numbering system is different for female and male connectors.

Example : Numbered in order from upper left to lower right — Numbered in order from upper right to lower left

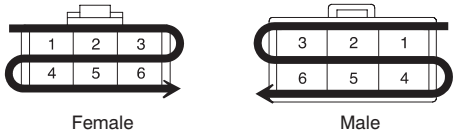

The numbering system for the overall wiring diagram is the same as above

[E] : Indicates a Relay Block. No shading is used and only the Relay Block No. is shown to distinguish it from the J/B.

Example : (1) Indicates Relay Block No.1

[F] : Junction Block (The number in the circle is the J/B No. and the connector code is shown beside it). Junction Blocks are shaded to clearly separate them from other parts.

Example:

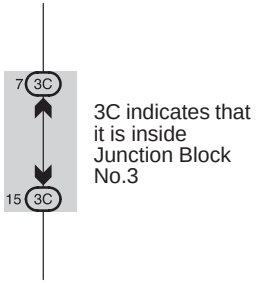

[G] : Indicates related system.

[H] : Indicates the wiring harness and wiring harness connector. The wiring harness with male terminal is shown with arrows (⩔). Outside numerals are pin numbers.

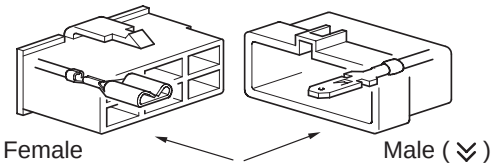

[I] : ( ) is used to indicate different wiring and connector, etc. when the vehicle model, engine type, or specification is different.

[J] : Indicates a shielded cable.

[K] : Indicates and located on ground point.

[L] : The same code occuring on the next page indicates that the wire harness is continuous.

cardiagn.com

SYSTEM INDEX

SYSTEMS	LOCATION
ABS	13–2
Air Conditioner	23–2
Audio System	21–2
Back–Up Light	8–2
Charging	1–4
Cigarette Lighter	18–2
Clock	20–2
Combination Meter	22–2
Door Lock Control	14–2
ECT	4–3
Engine Control	2–3
Engine Immobilizer System	3–2
Front Fog Light	7–2
Front Wiper and Washer	17–2
Headlight	6–2
Horn	6–4
Illumination	10–2
Interior Light	11–2

SYSTEMS	LOCATION
Key Reminder	7–3
Light Reminder	7–3
Power Outlet	18–2
Power Source	1~23–1
Power Window	16–2
Rear Window Defogger	19–2
Remote Control Mirror	18–3
Seat Belt Warning	12–2
Shift Lock	19–3
SRS	12–3
Starting	1–2
Stop Light	8–3
Taillight	10–2
Theft Deterrent	15–2
Turn Signal and Hazard Warning Light	9–2
Wireless Door Lock Control	15–2
4WD	5–2

cardiagn.com

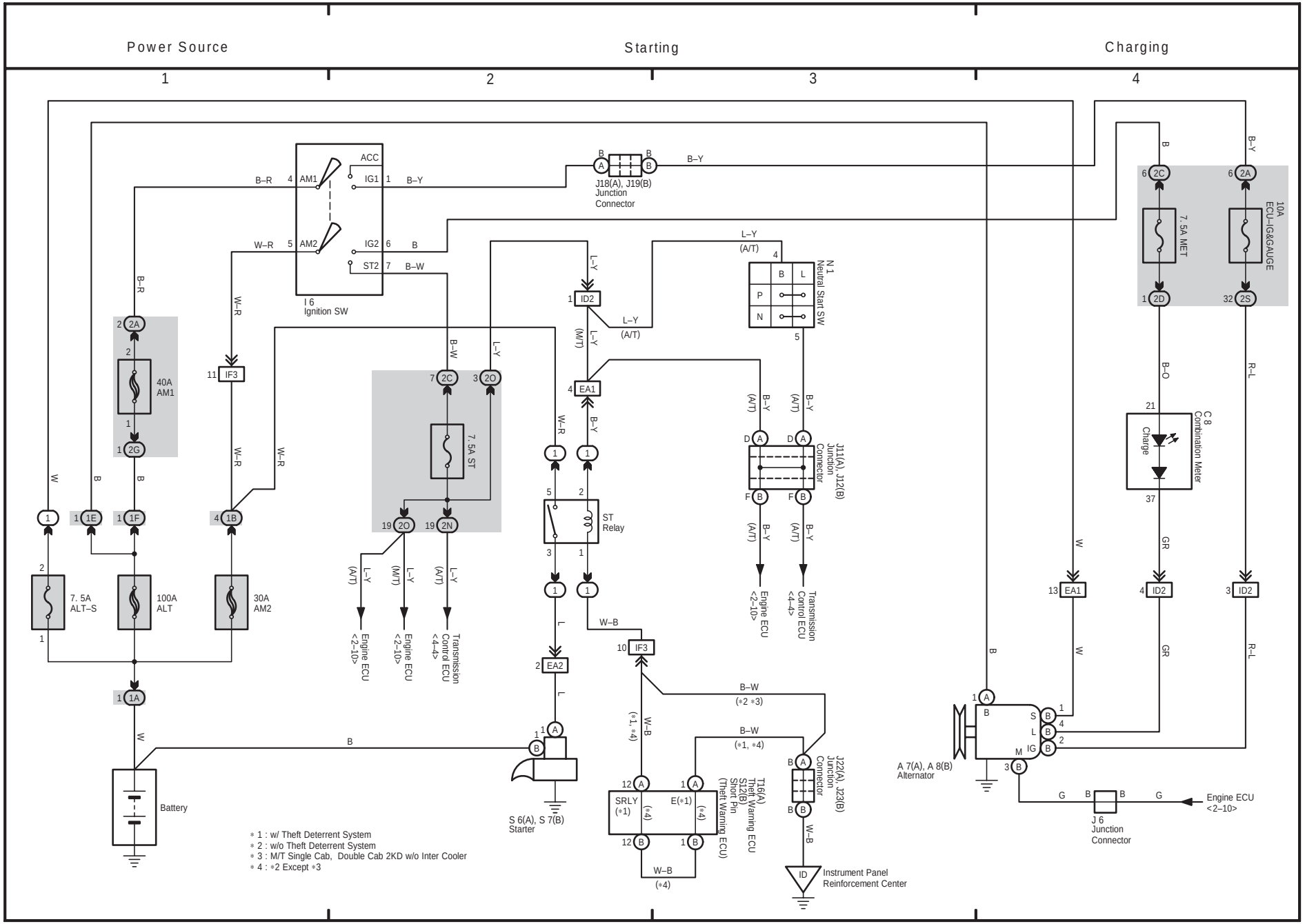

cardiagn.com

2 HILUX

(Cont. next page)

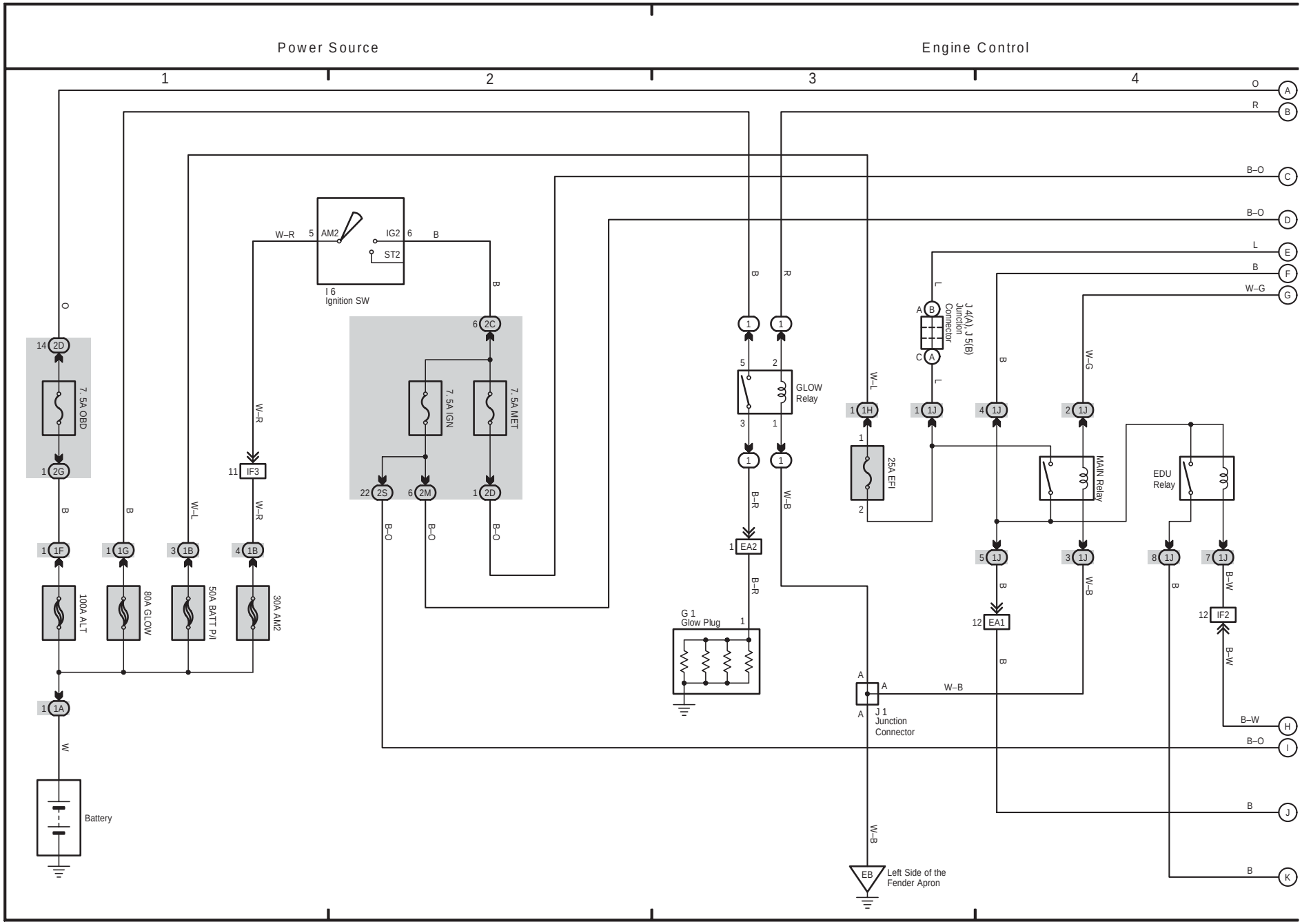

cardiagn.com

(Cont. next page)

Engine Control

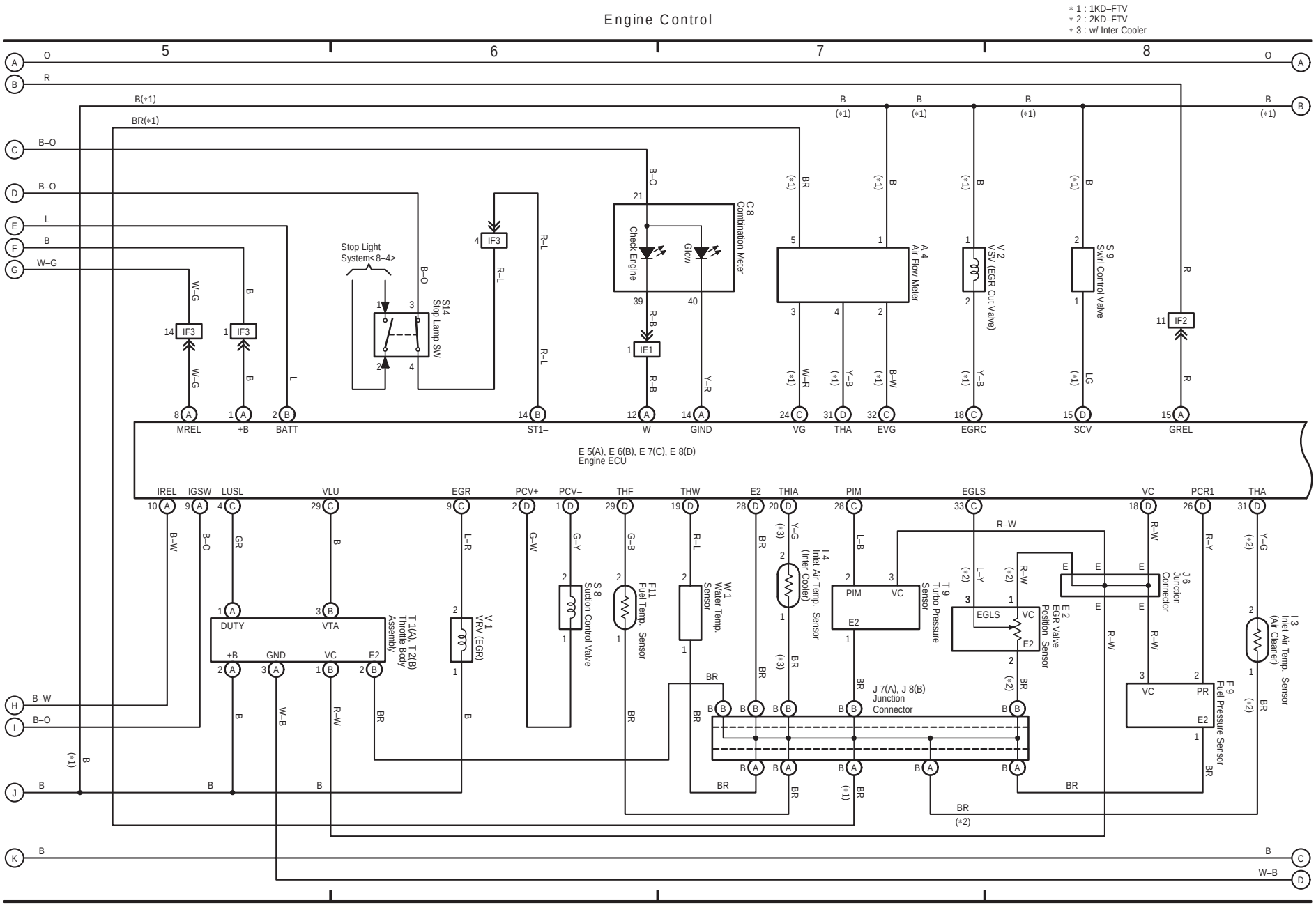

cardiagn.com

2 HILUX (Cont' d)

(Cont. next page)

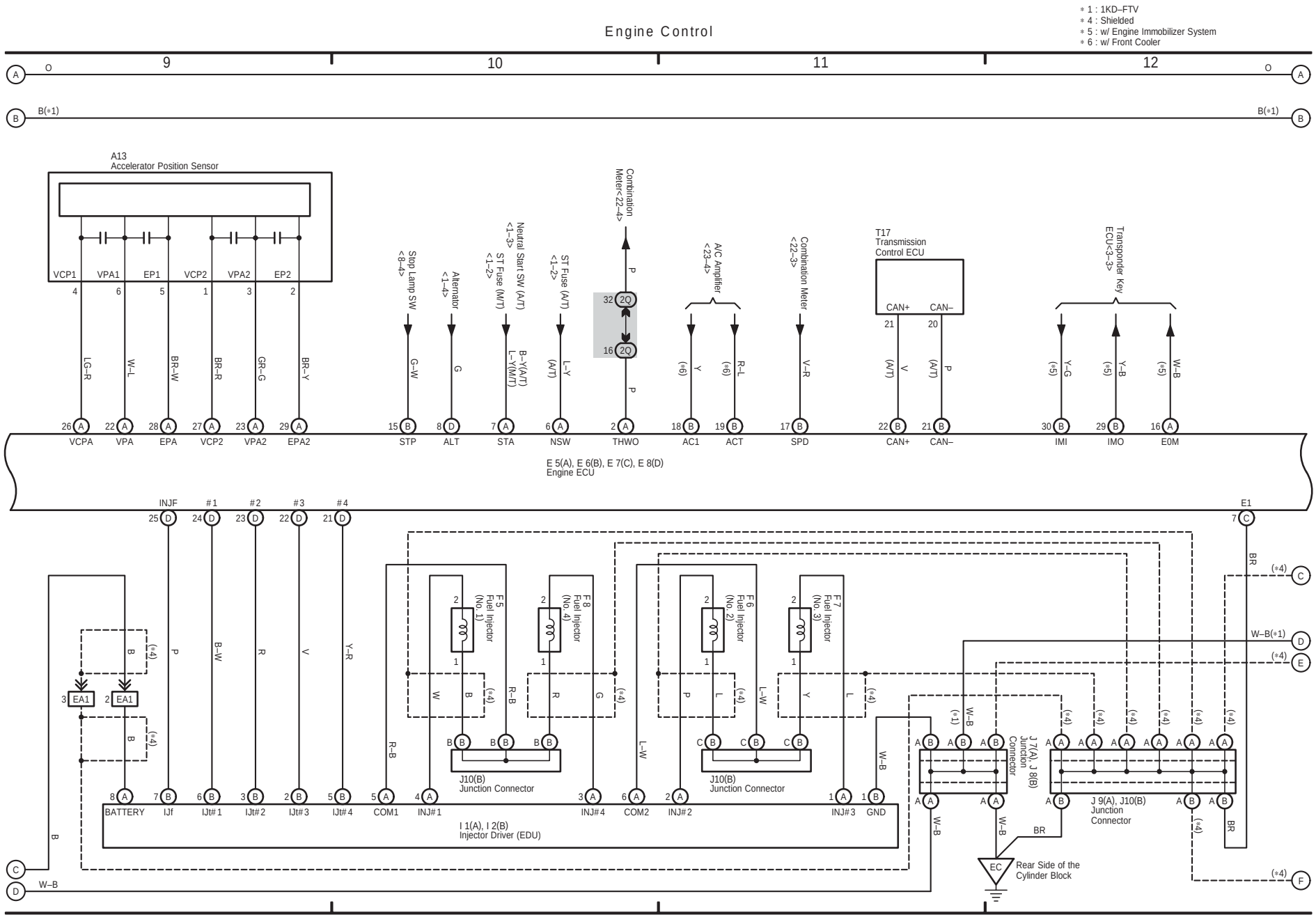

cardiagn.com

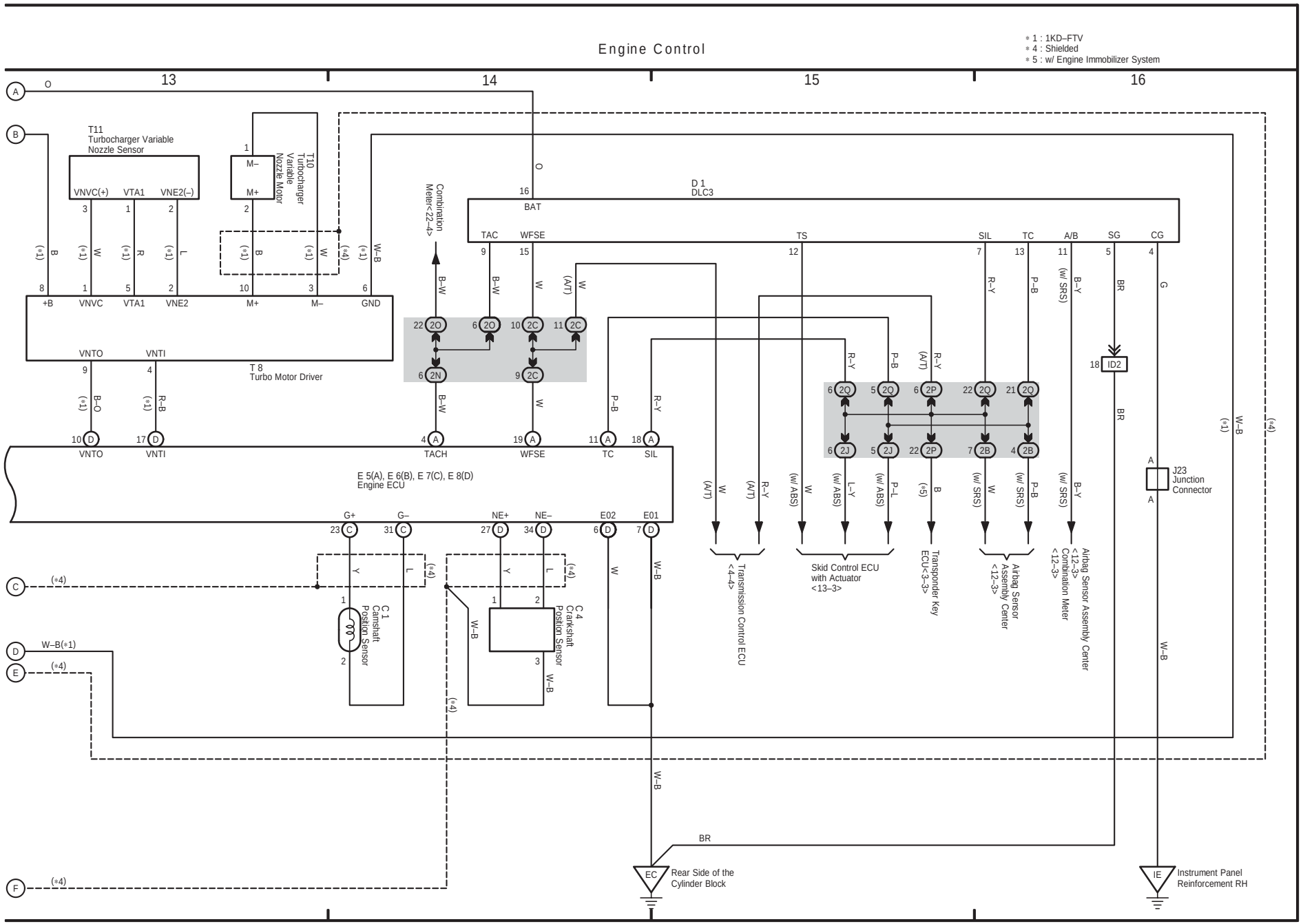

cardiagn.com

3 HILUX

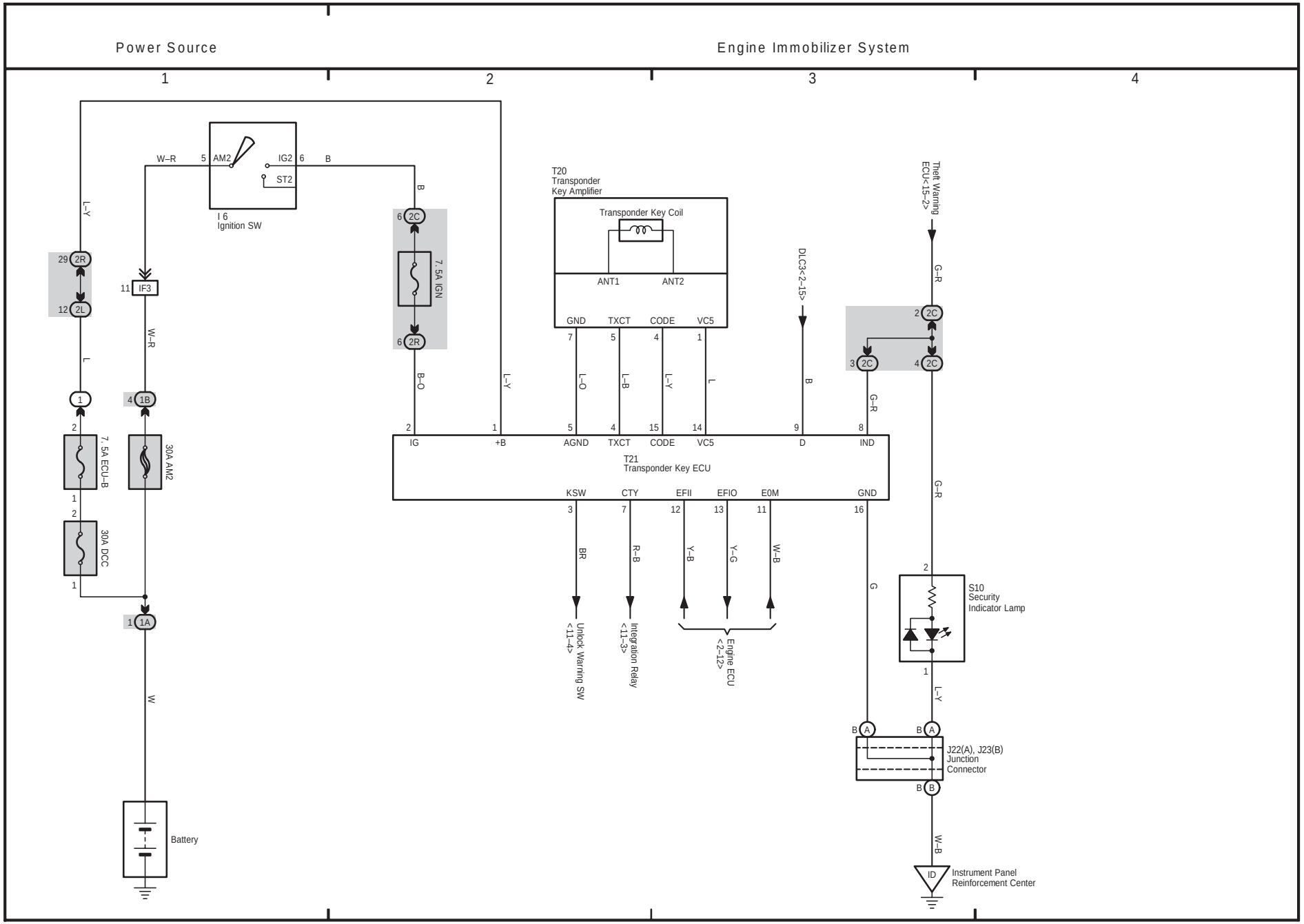

cardiagn.com

cardiagn.com

(Cont. next page)

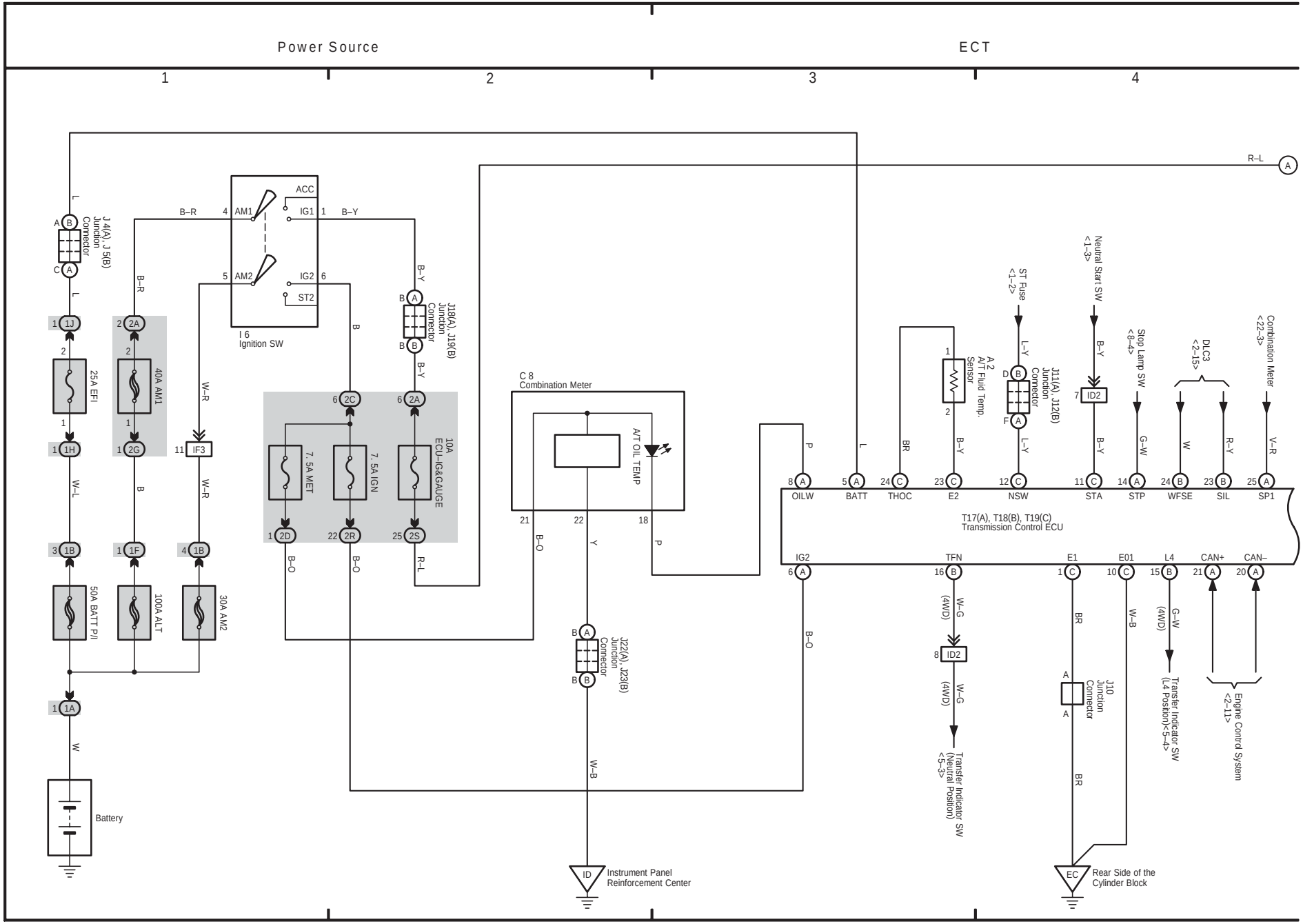

cardiagn.com

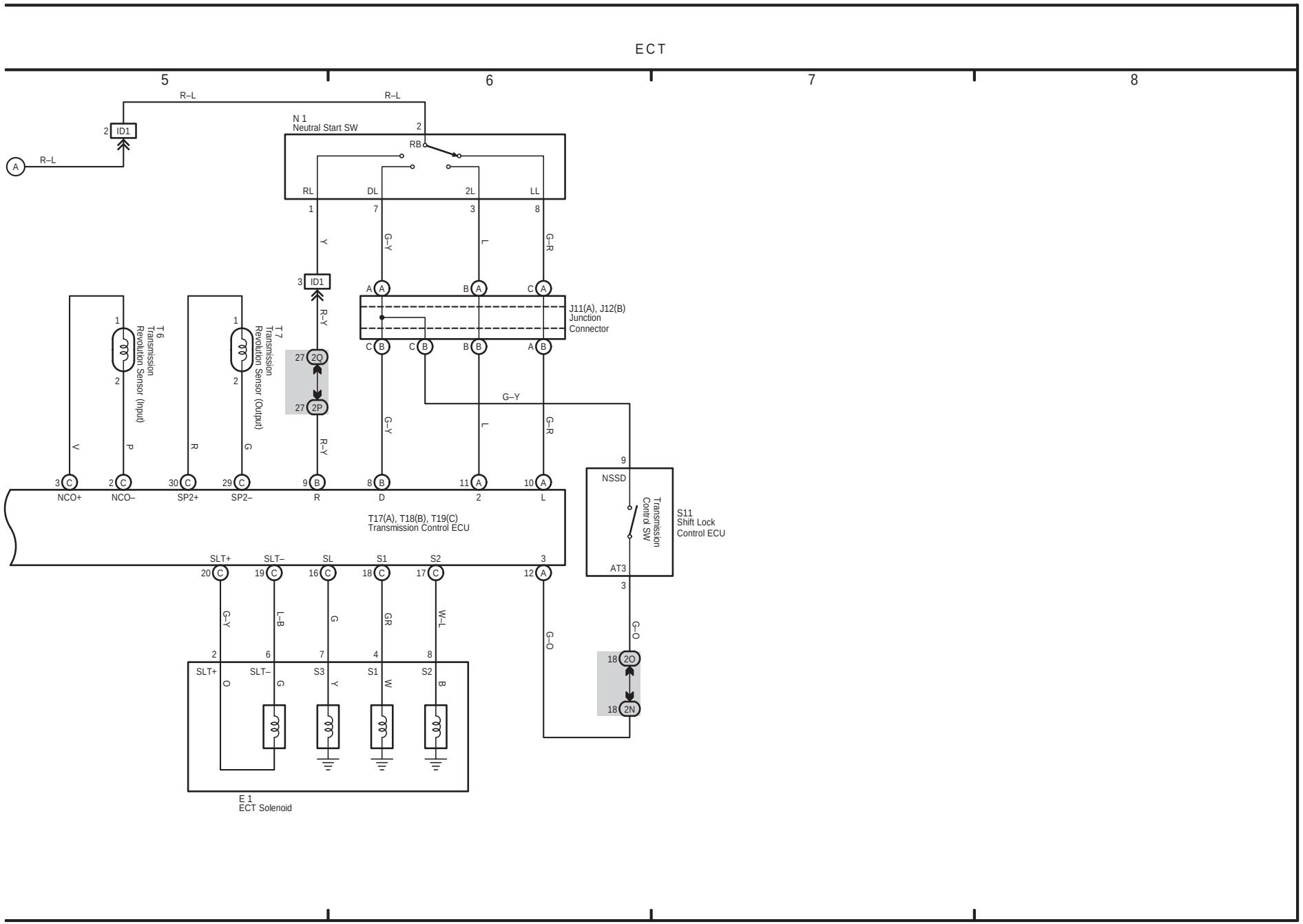

cardiagn.com

5 HILUX

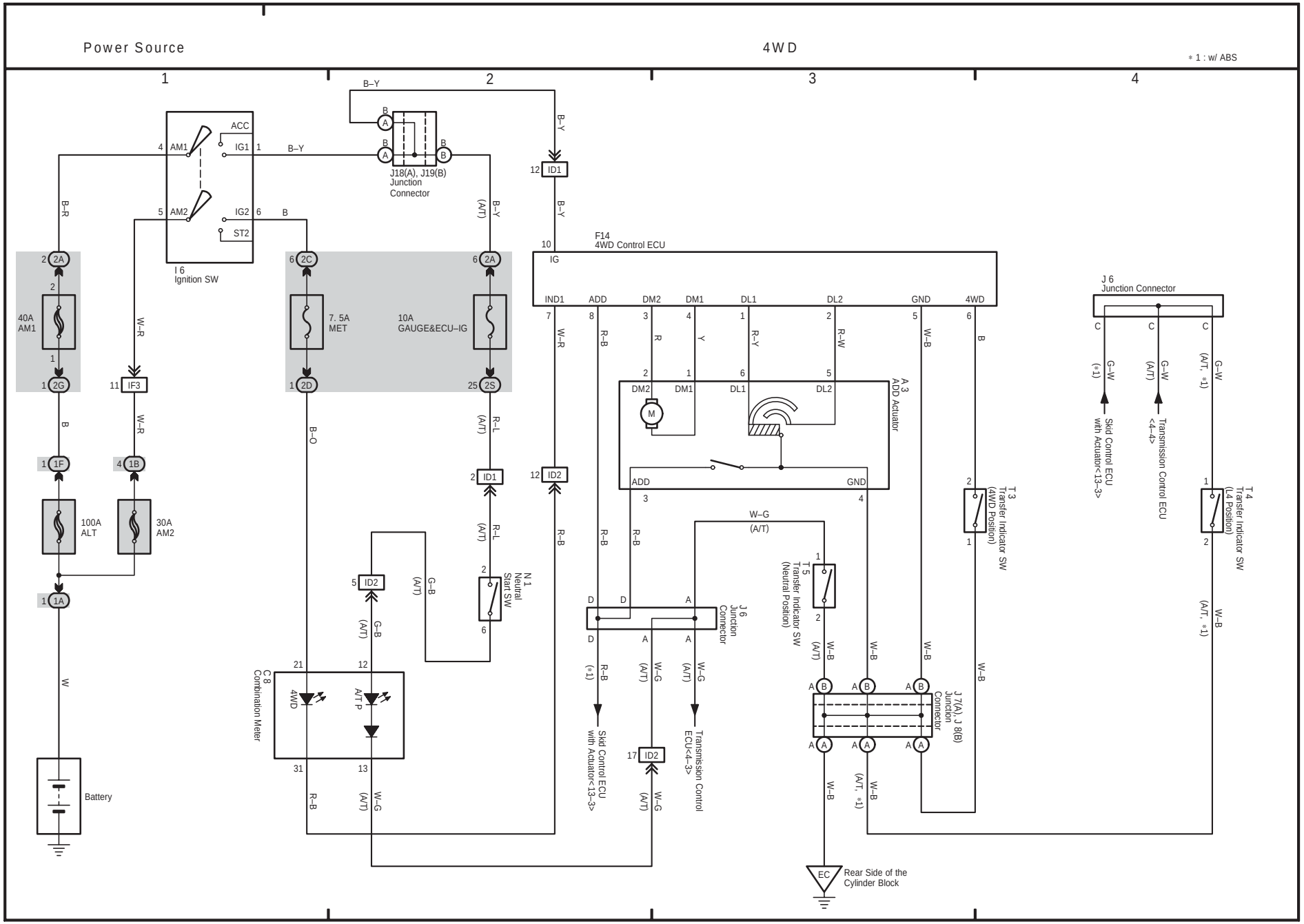

M OVERALL ELECTRICAL WIRING DIAGRAM

cardiagn.com

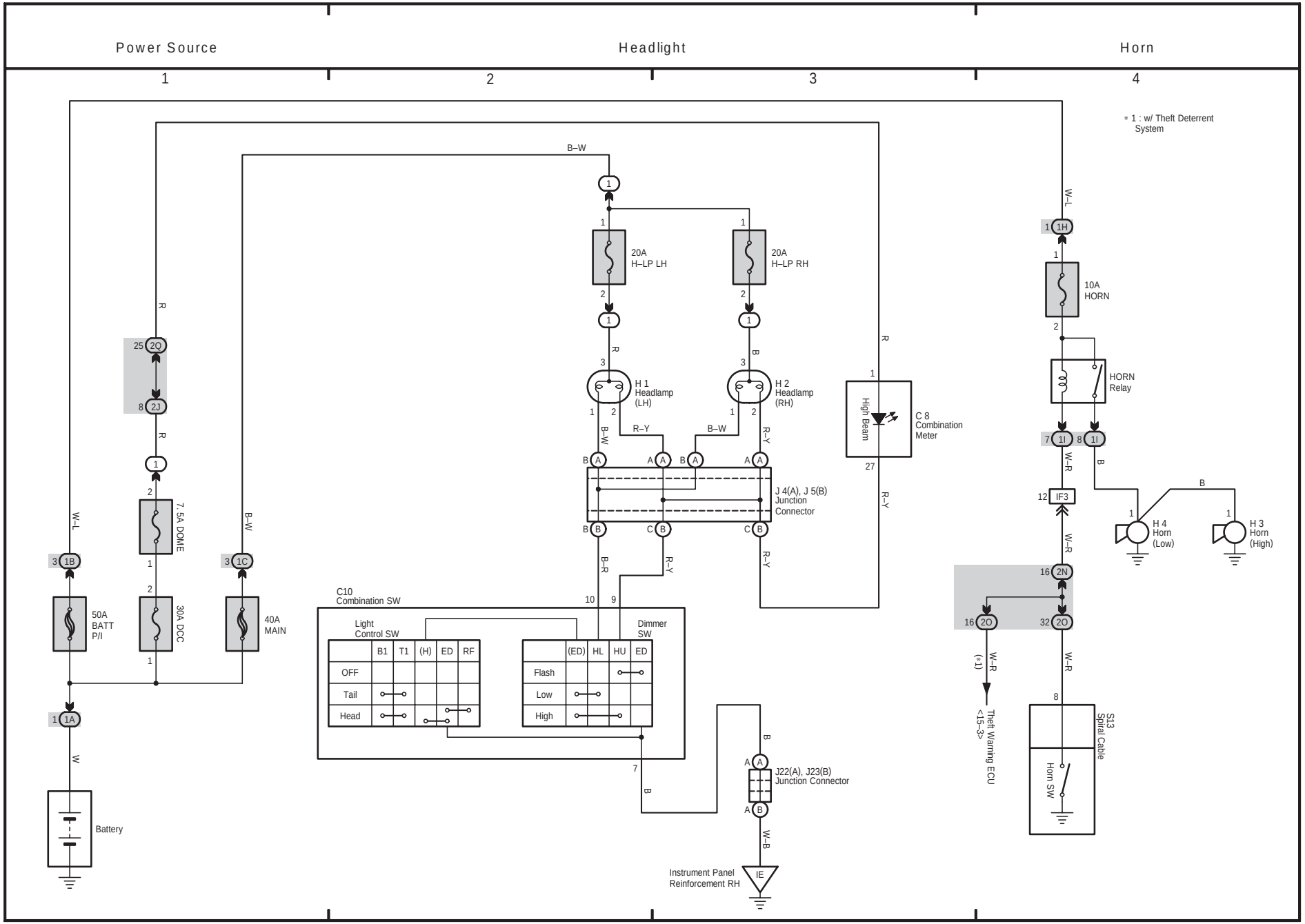

cardiagn.com

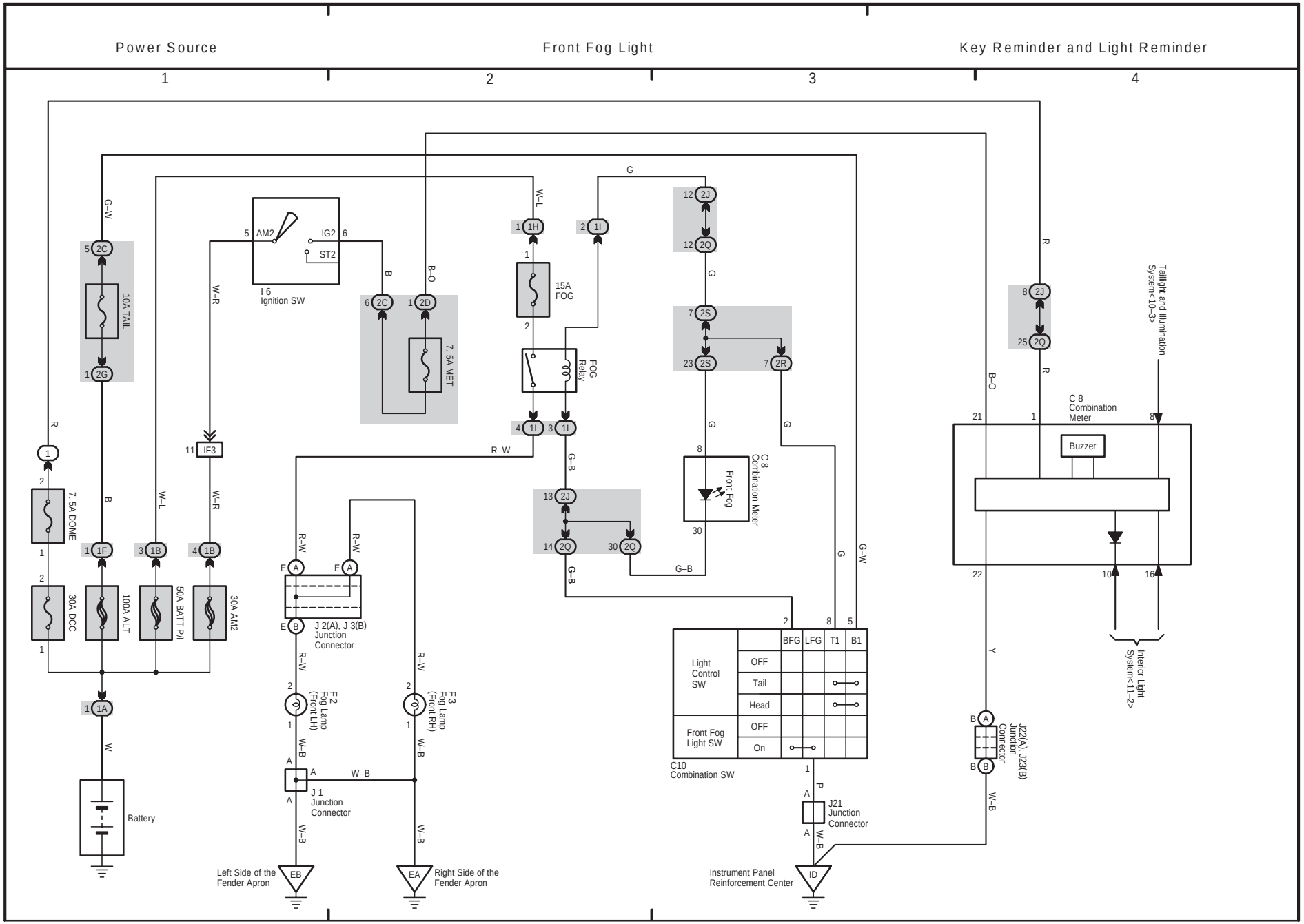

cardiagn.com

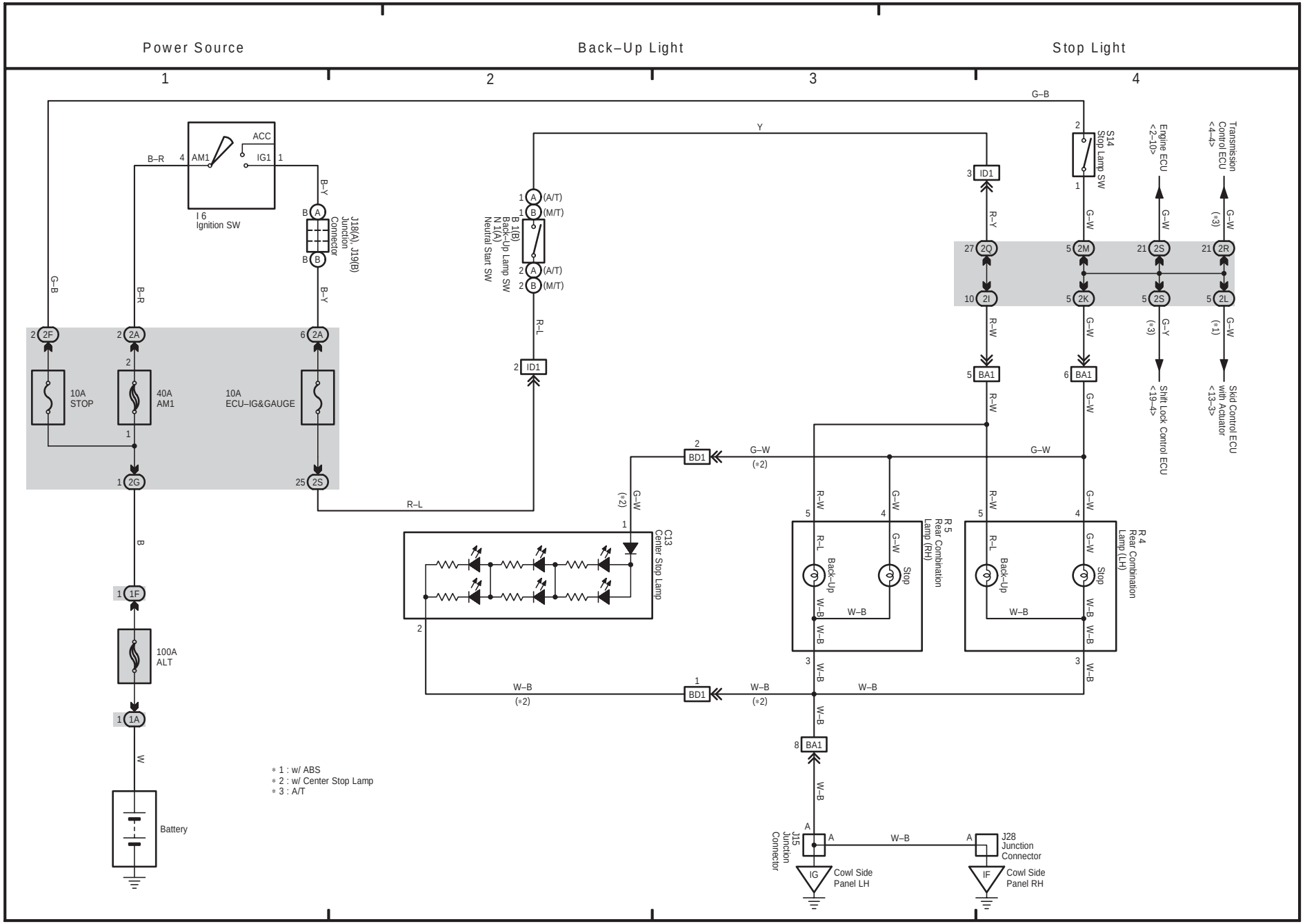

cardiagn.com

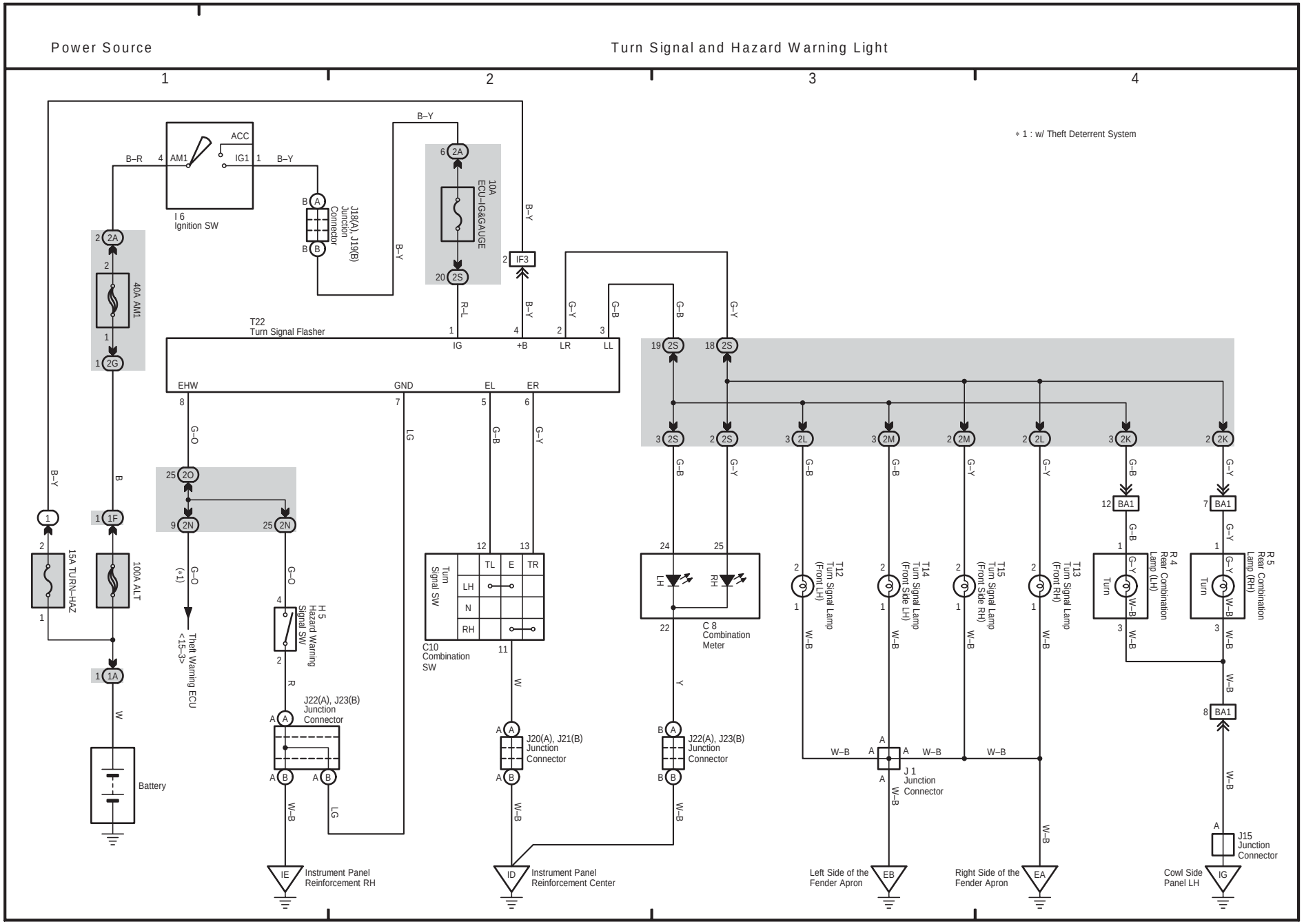

cardiagn.com

cardiagn.com

10 HILUX

(Cont. next page)

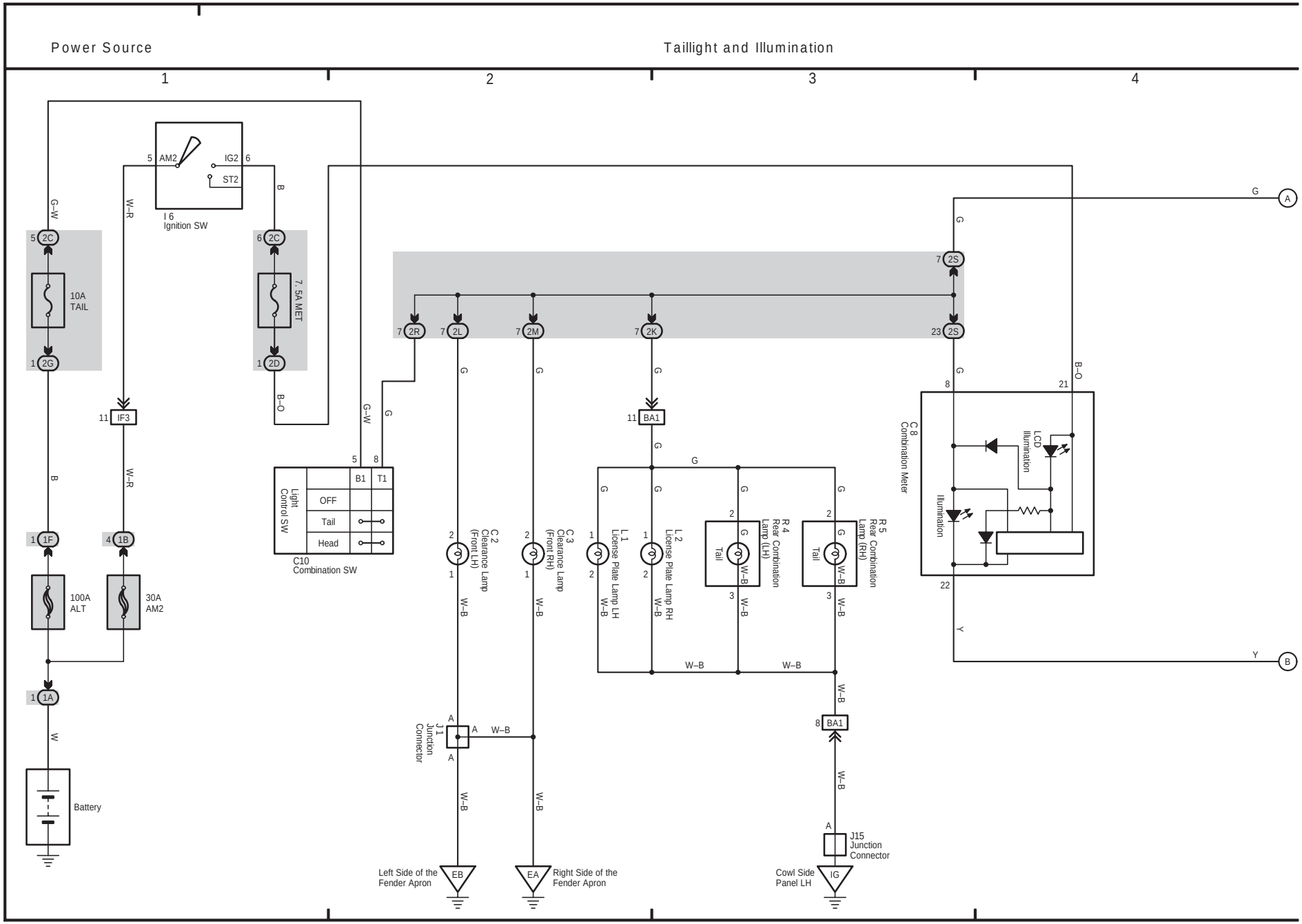

cardiagn.com

Taillight and Illumination

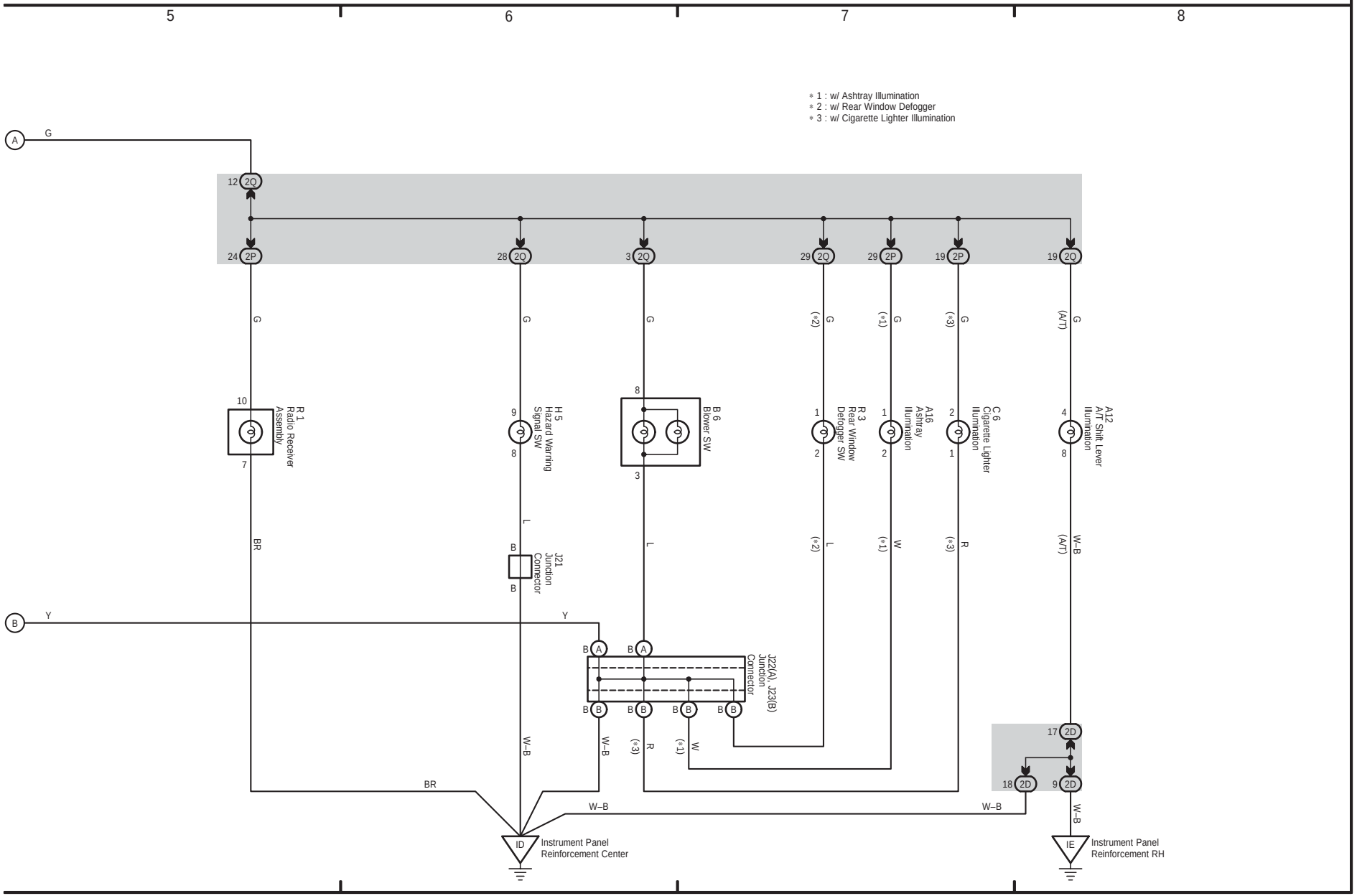

cardiagn.com

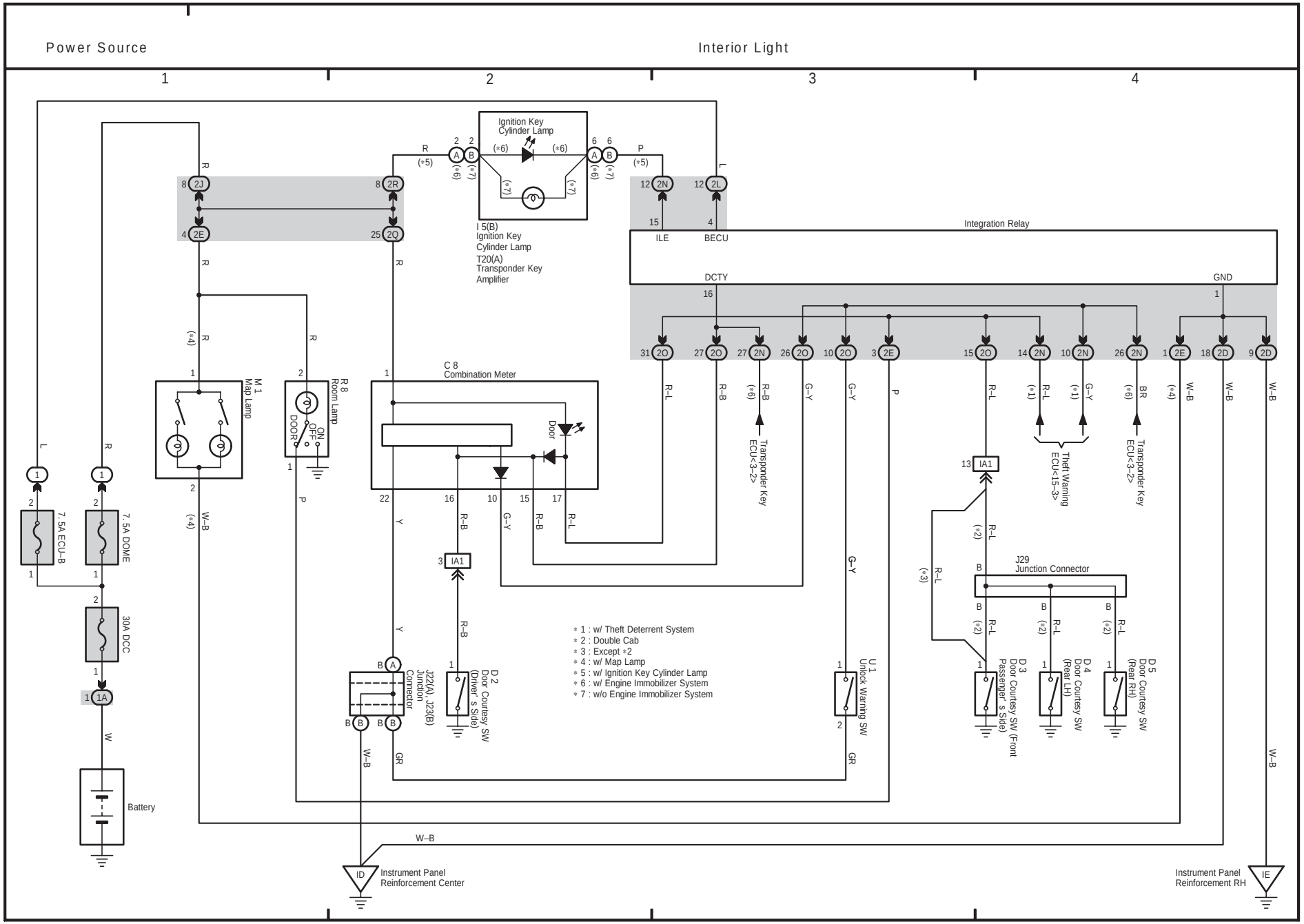

cardiagn.com

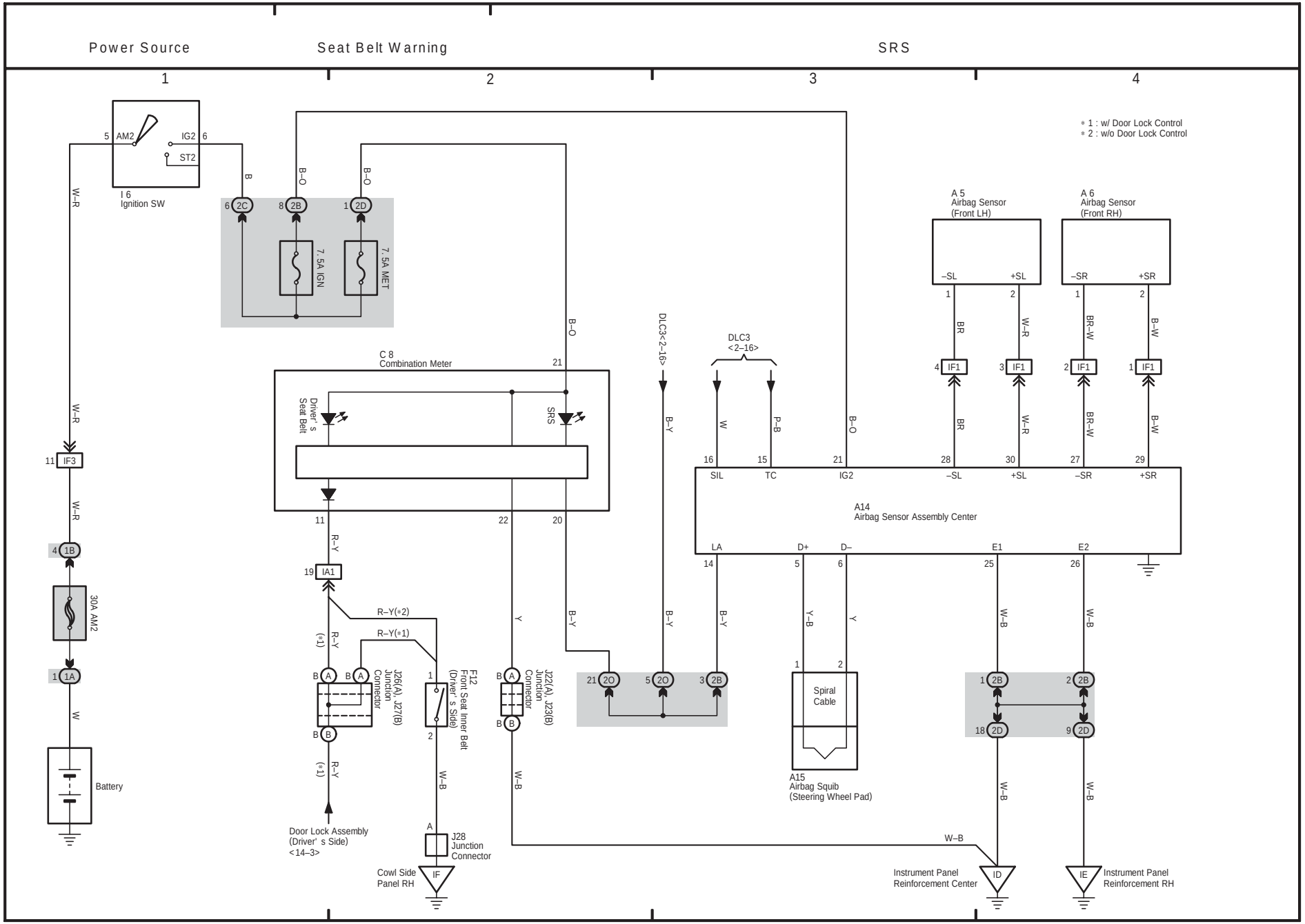

cardiagn.com

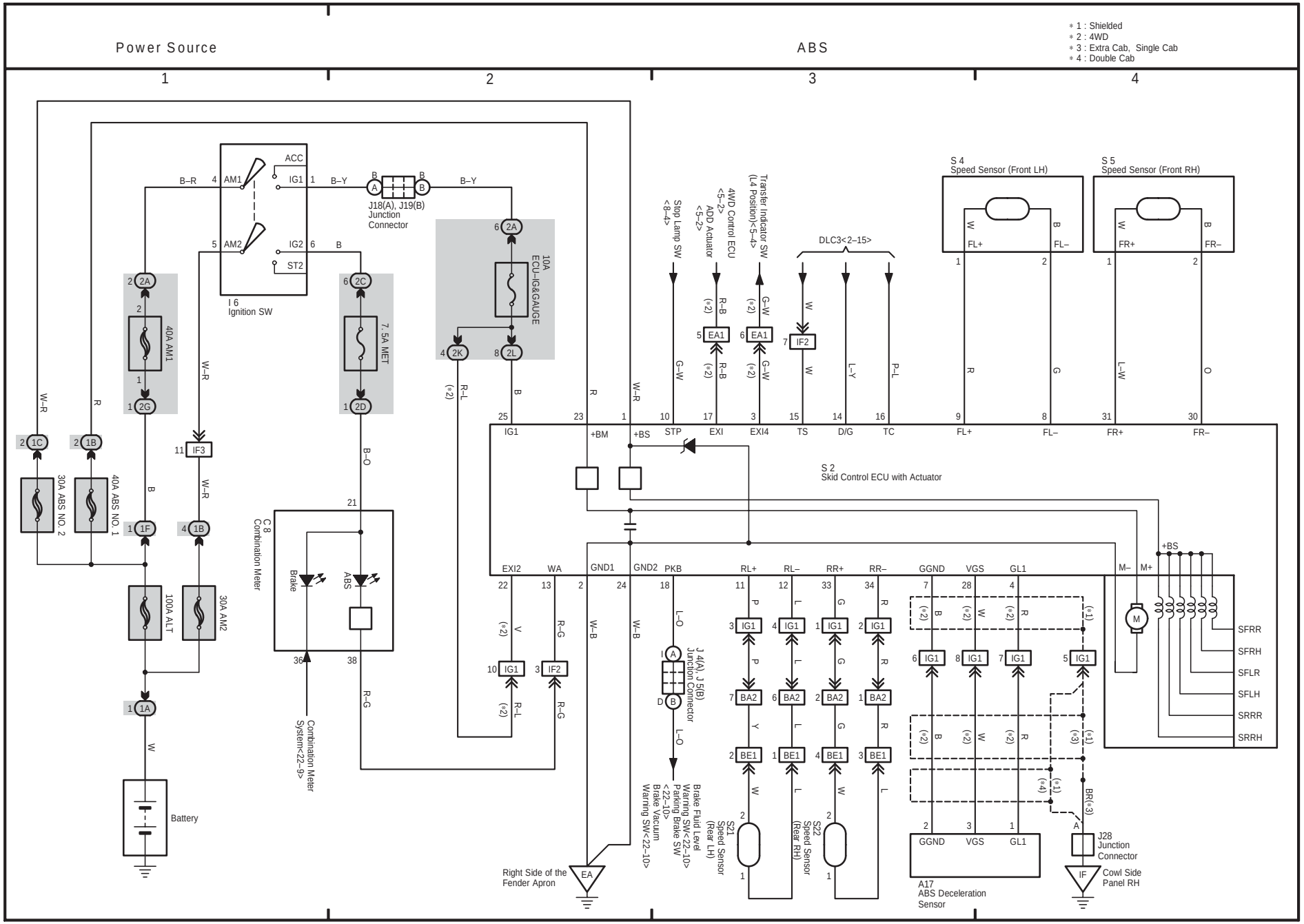

cardiagn.com

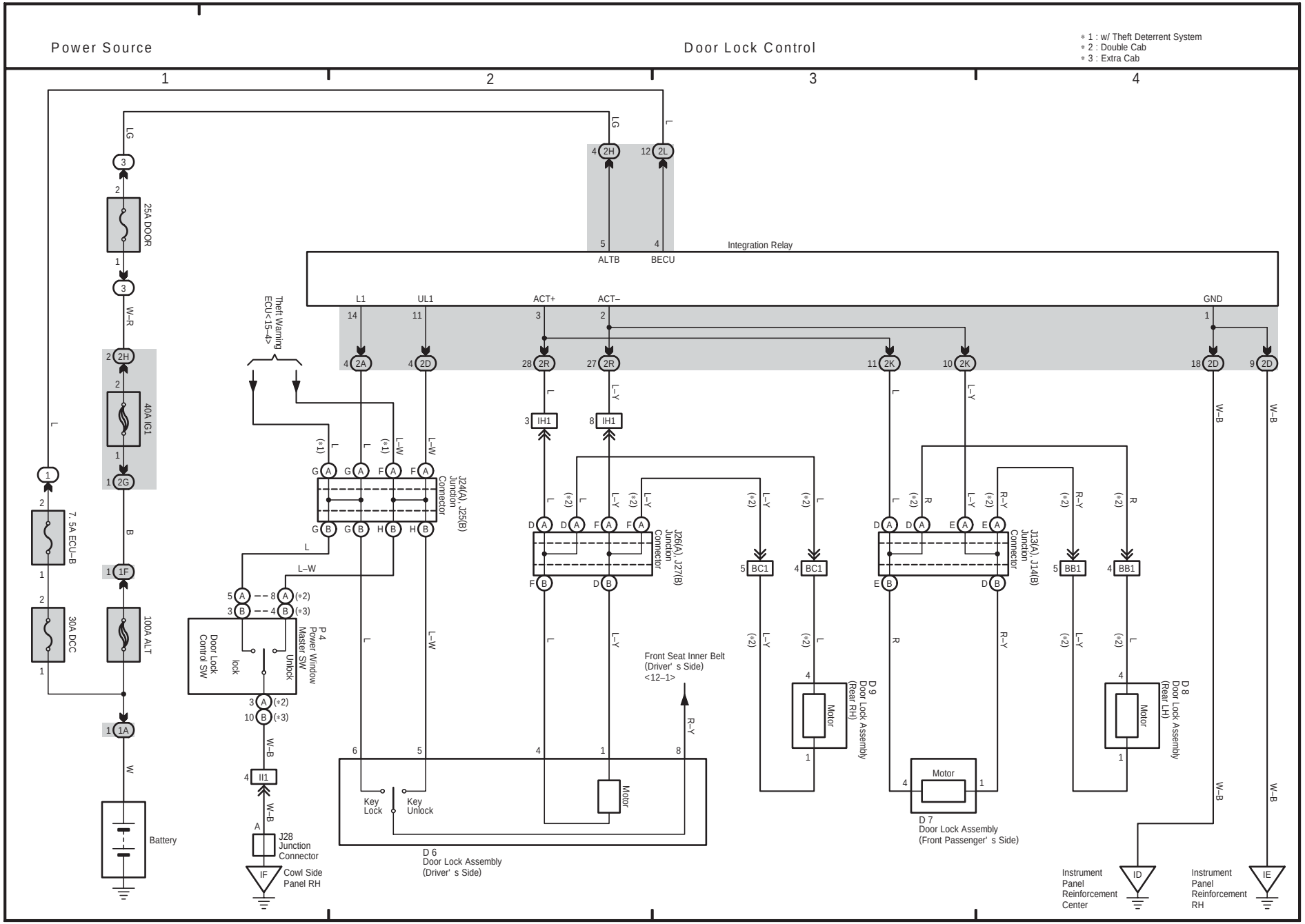

cardiagn.com

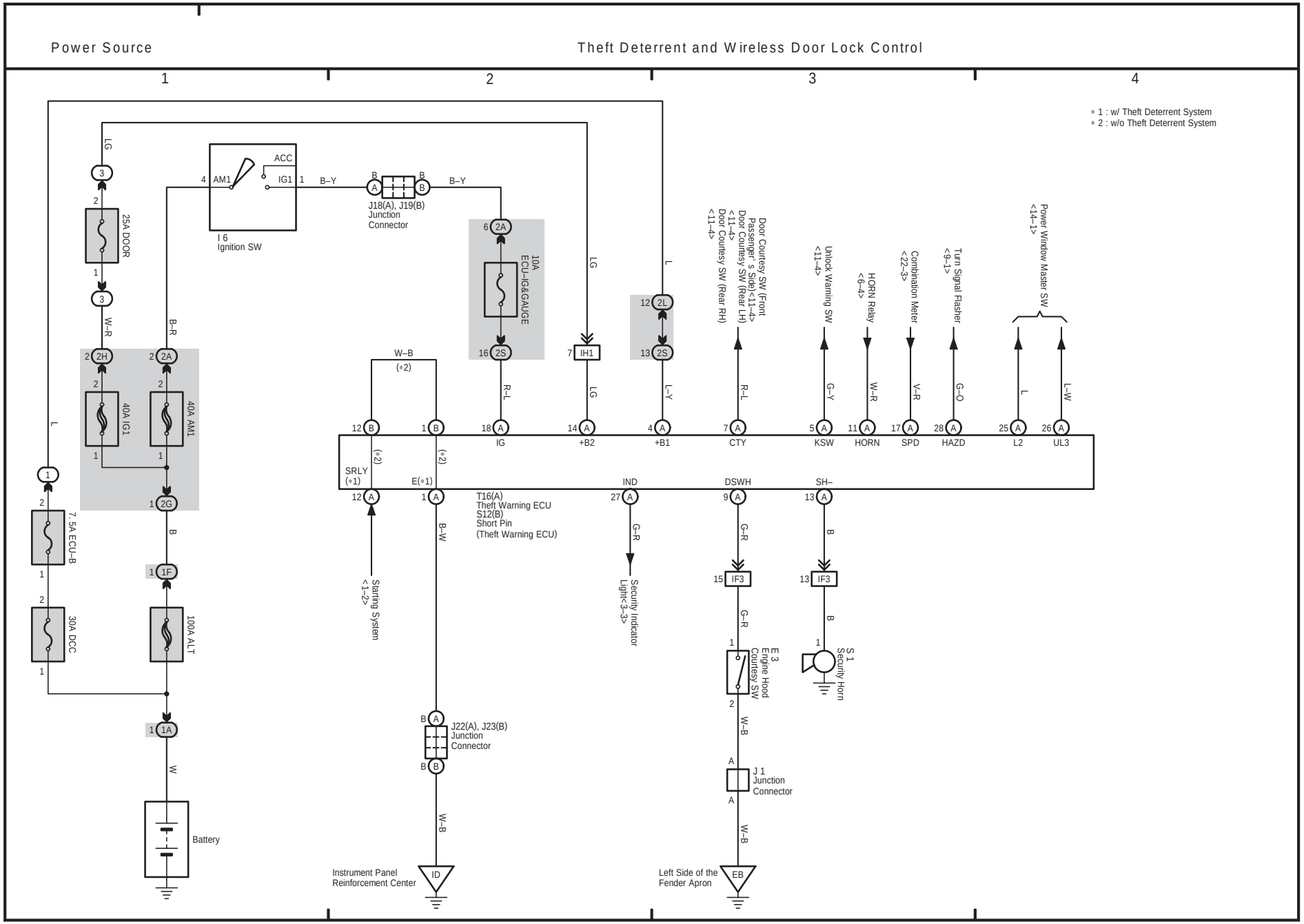

cardiagn.com

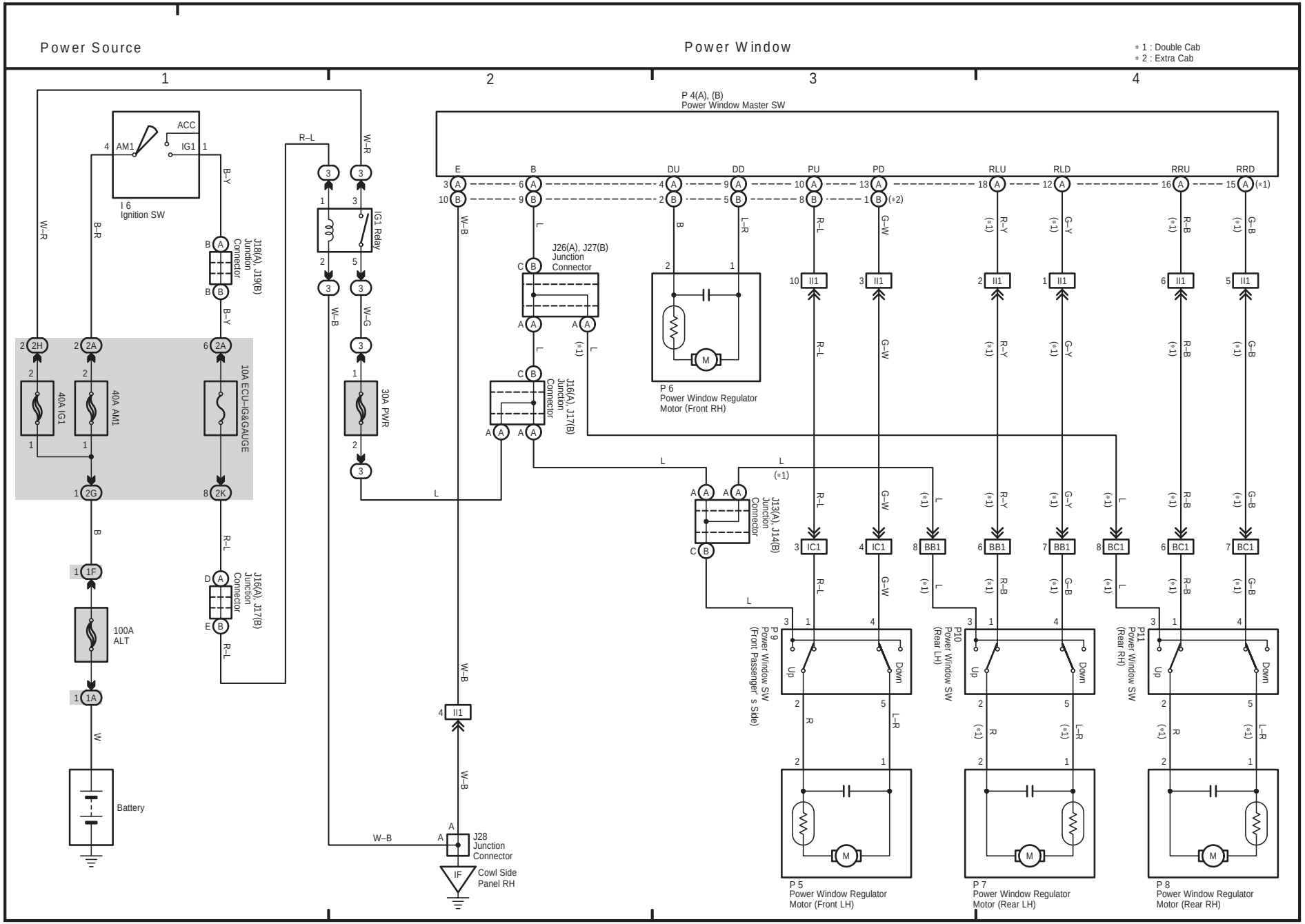

cardiagn.com

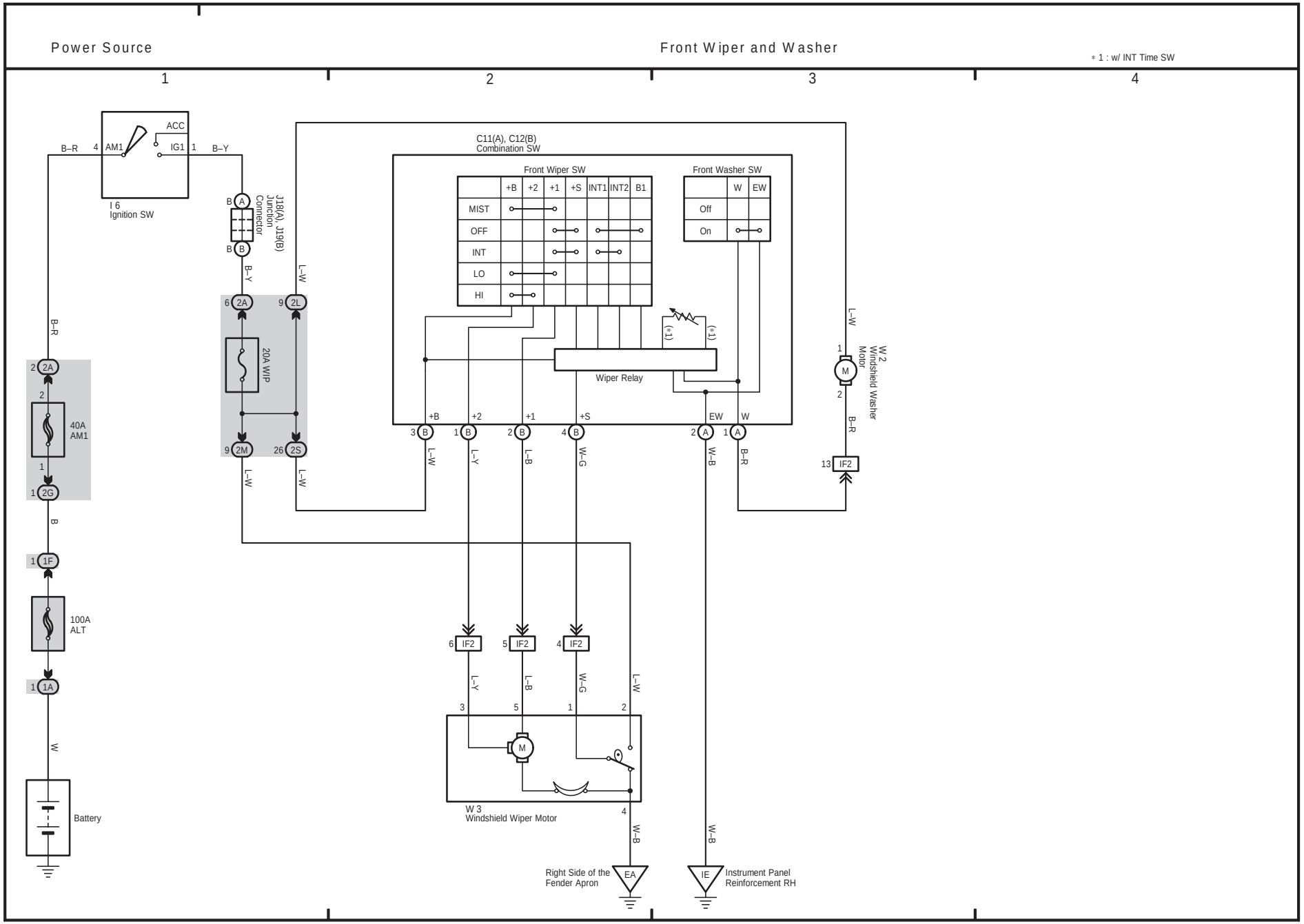

cardiagn.com

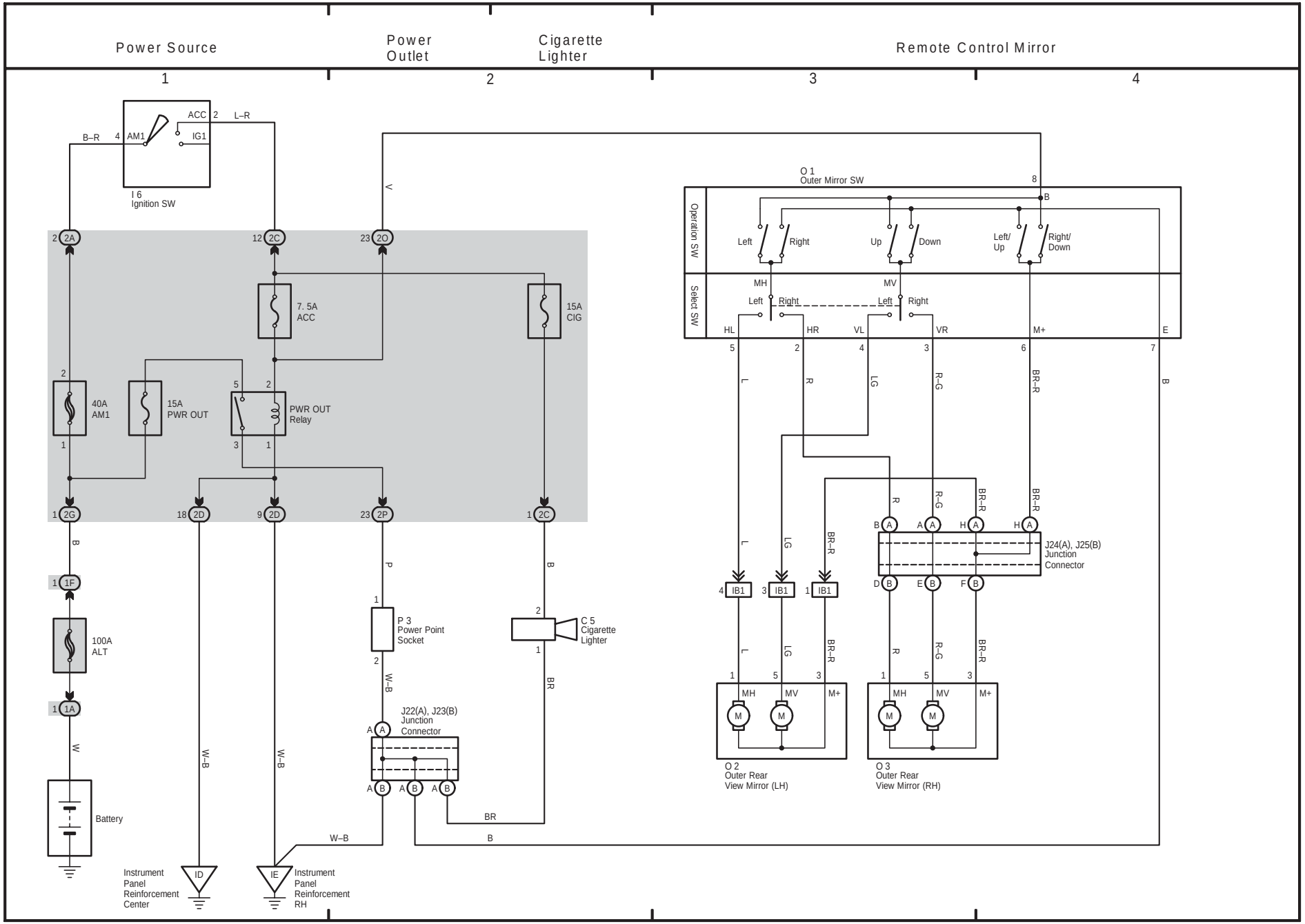

cardiagn.com

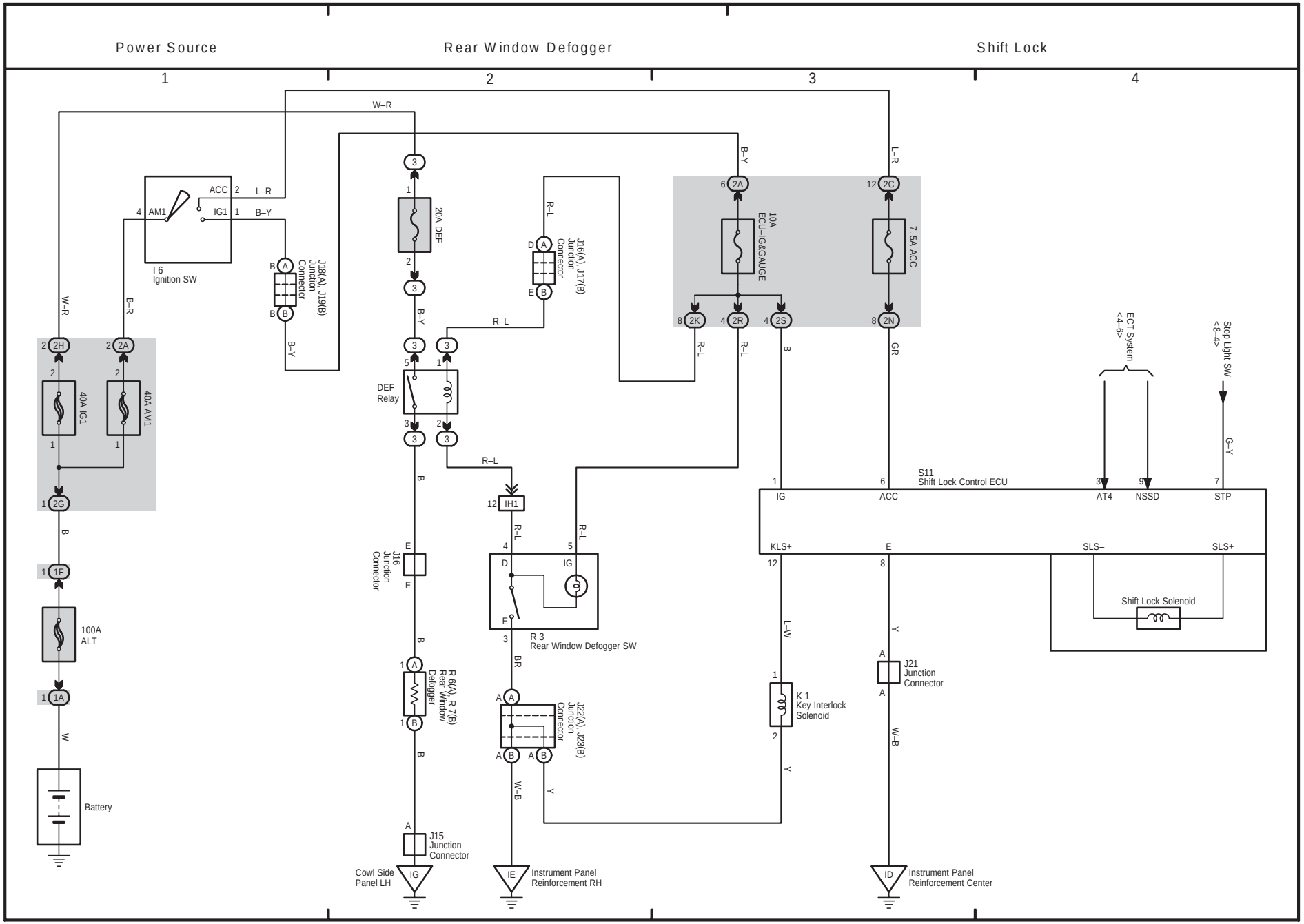

cardiagn.com

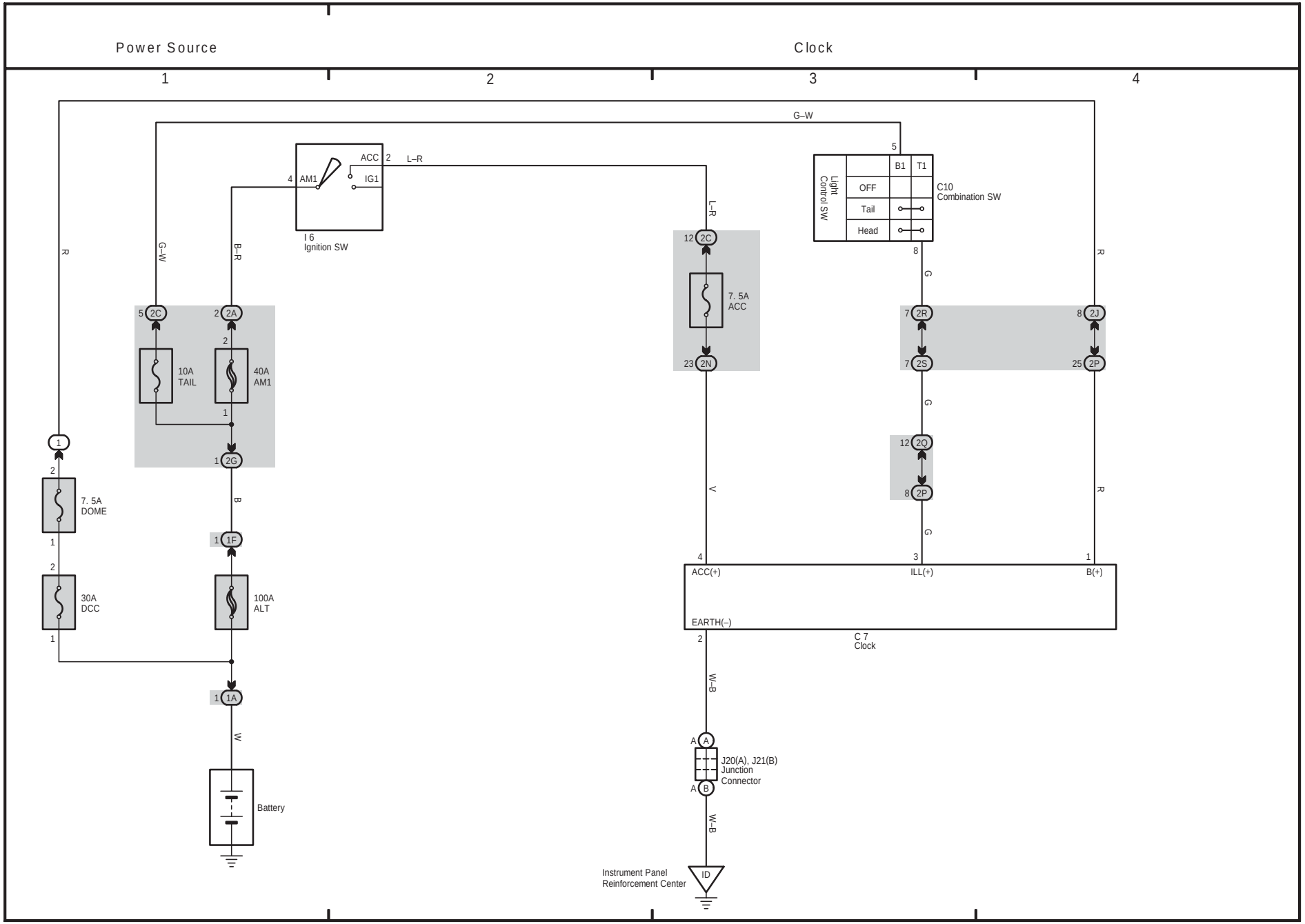

cardiagn.com

21 HILUX

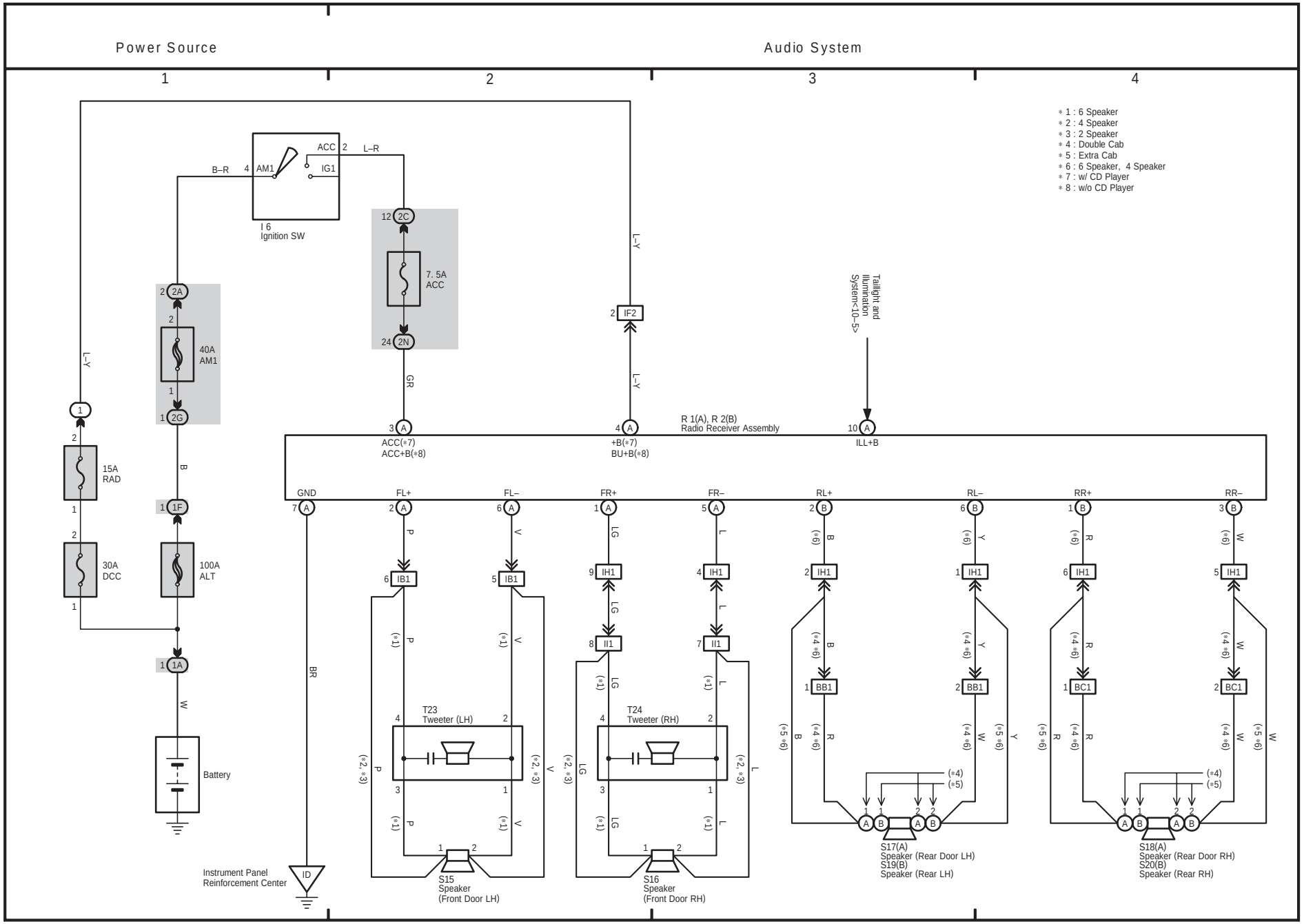

cardiagn.com

cardiagn.com

22 HILUX

(Cont. next page)

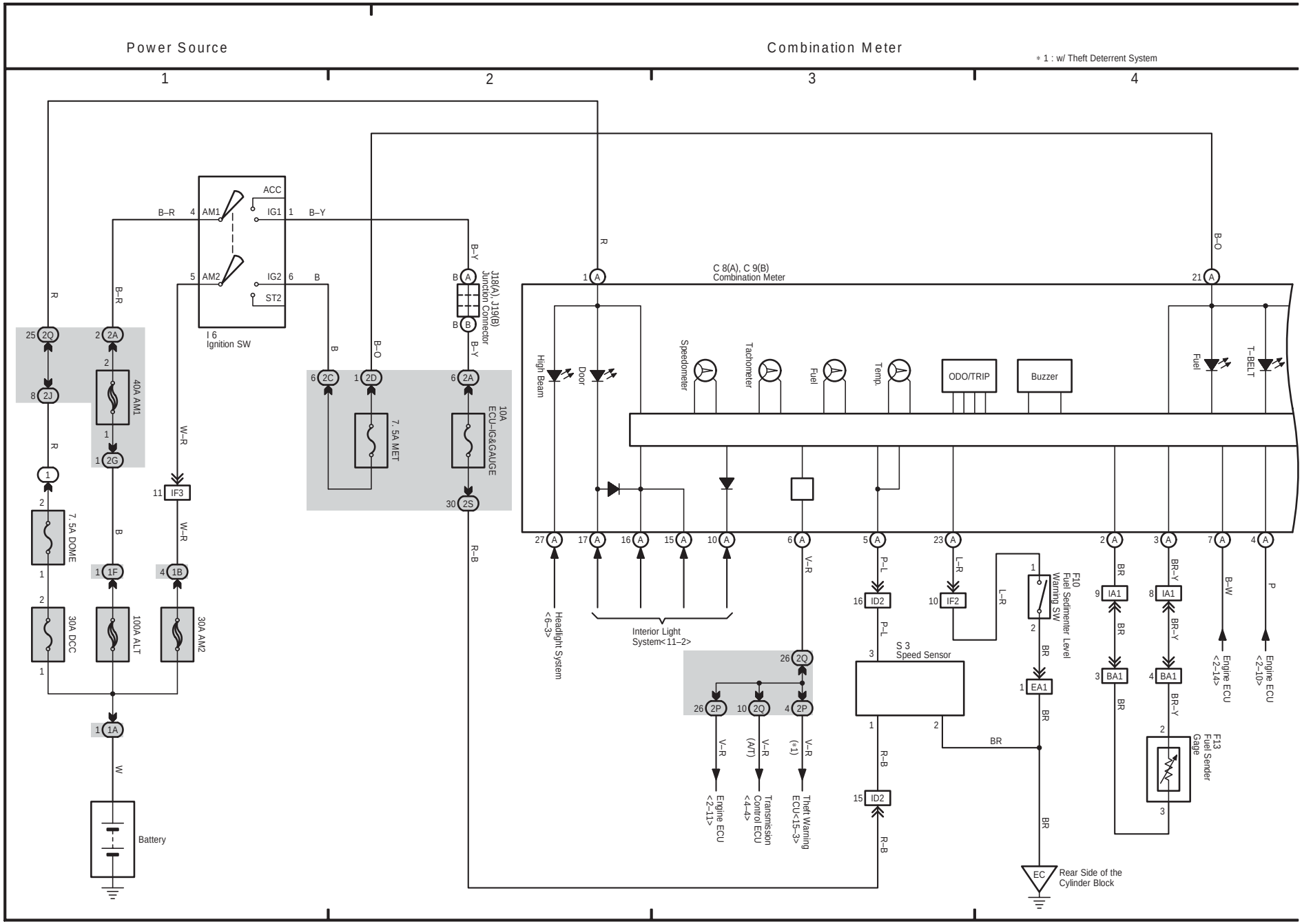

cardiagn.com

(Cont. next page)

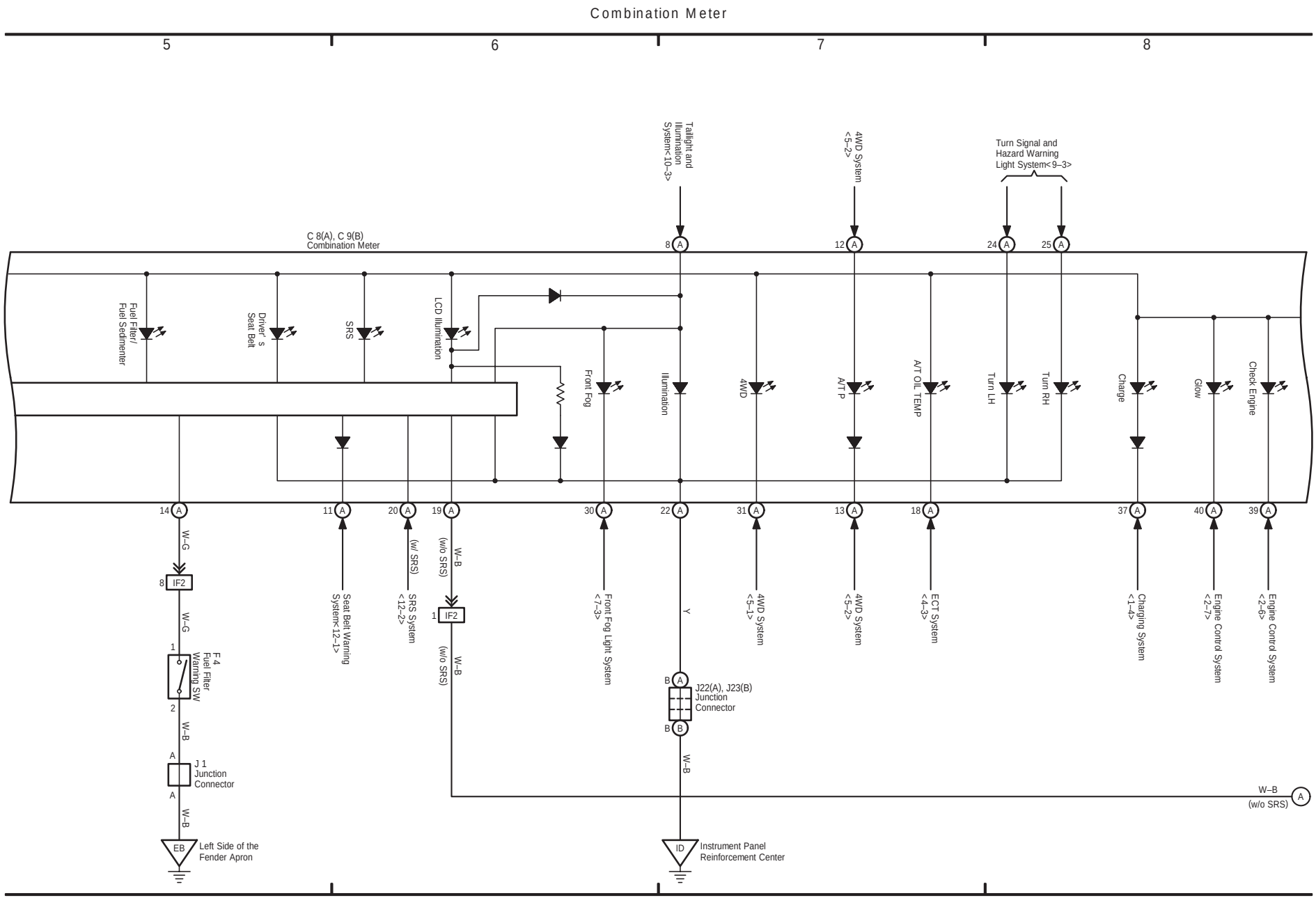

cardiagn.com

22 HILUX (Cont' d)

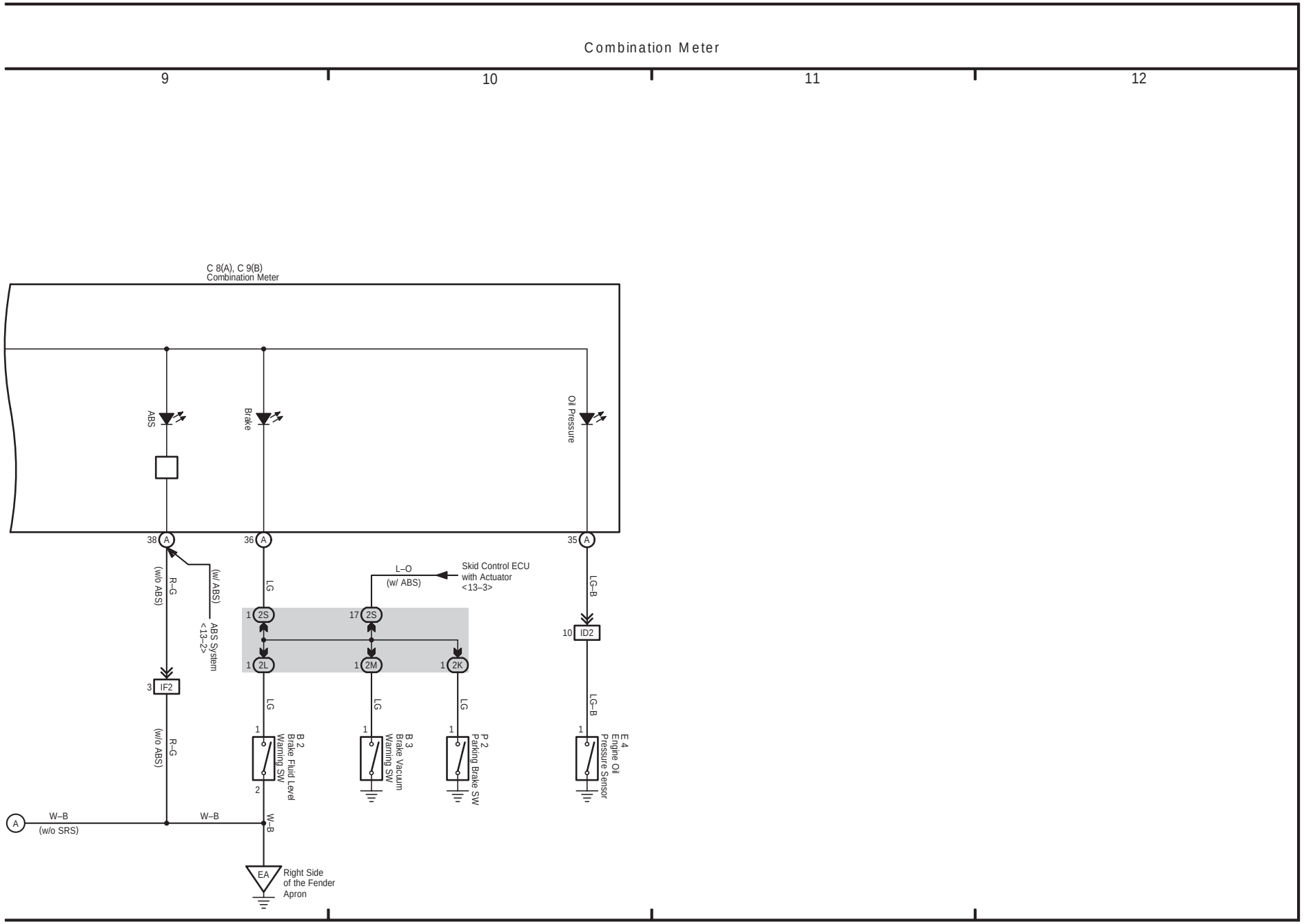

cardiagn.com

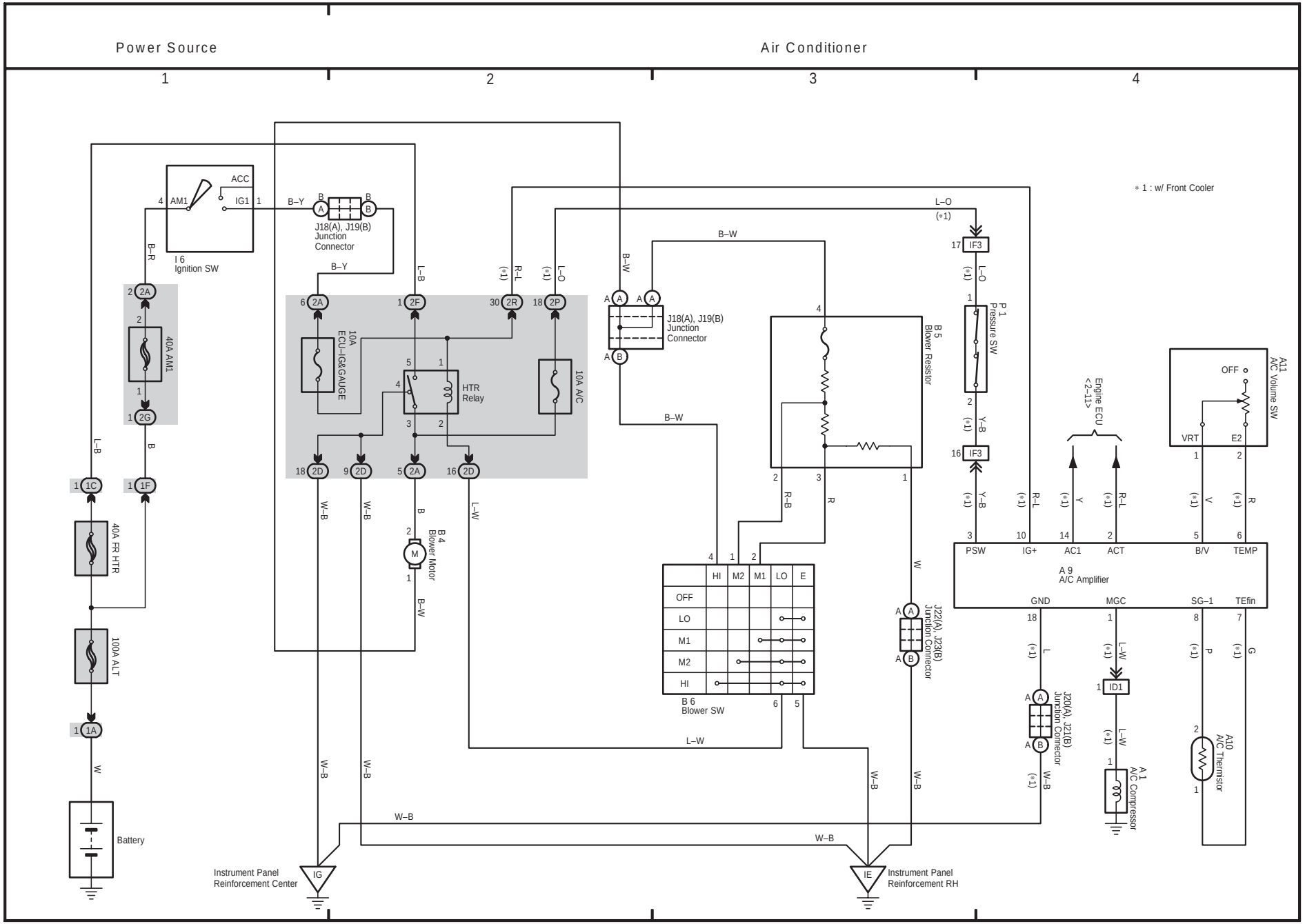

cardiagn.com